City of Columbia BMP Manual

Detailed Unified Sizing Criteria Example

Wet Pond Design

April 17, 2013

Wet Pond Example:

Unified Sizing Criteria Methodology

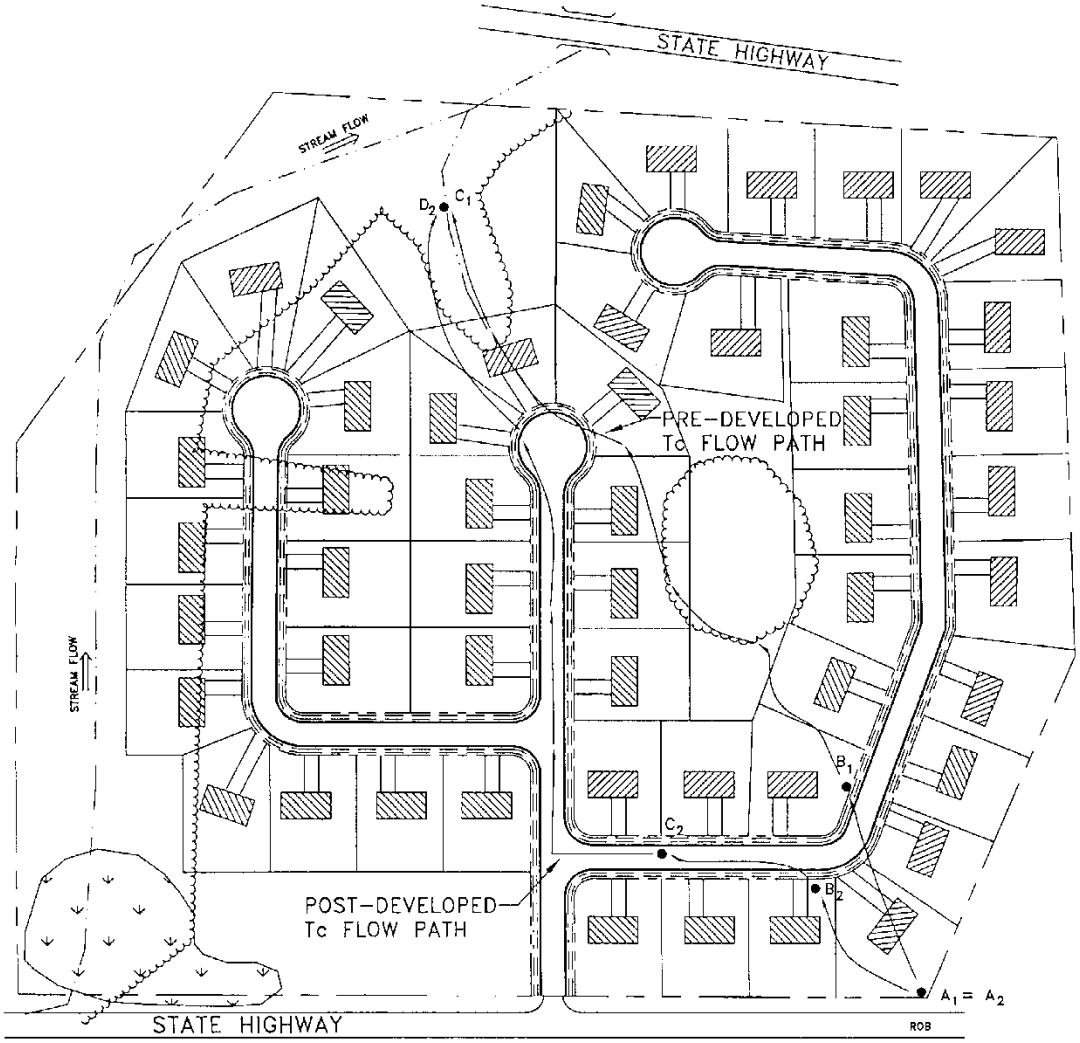

Base Data

Location: Rome, GA

Site Drainage Area = 38.0 ac

Measured Imp. Area=13.8 ac; or
I = 13.8/38 = 36.3%

Soils Types: 60% “C”, 40% “B”

Zoning: Residential (½ ac lots)

Hydrologic Data

	Pre	Post
CN	65	78
t_c	.32 hr	.17 hr

Following the design exercise initially

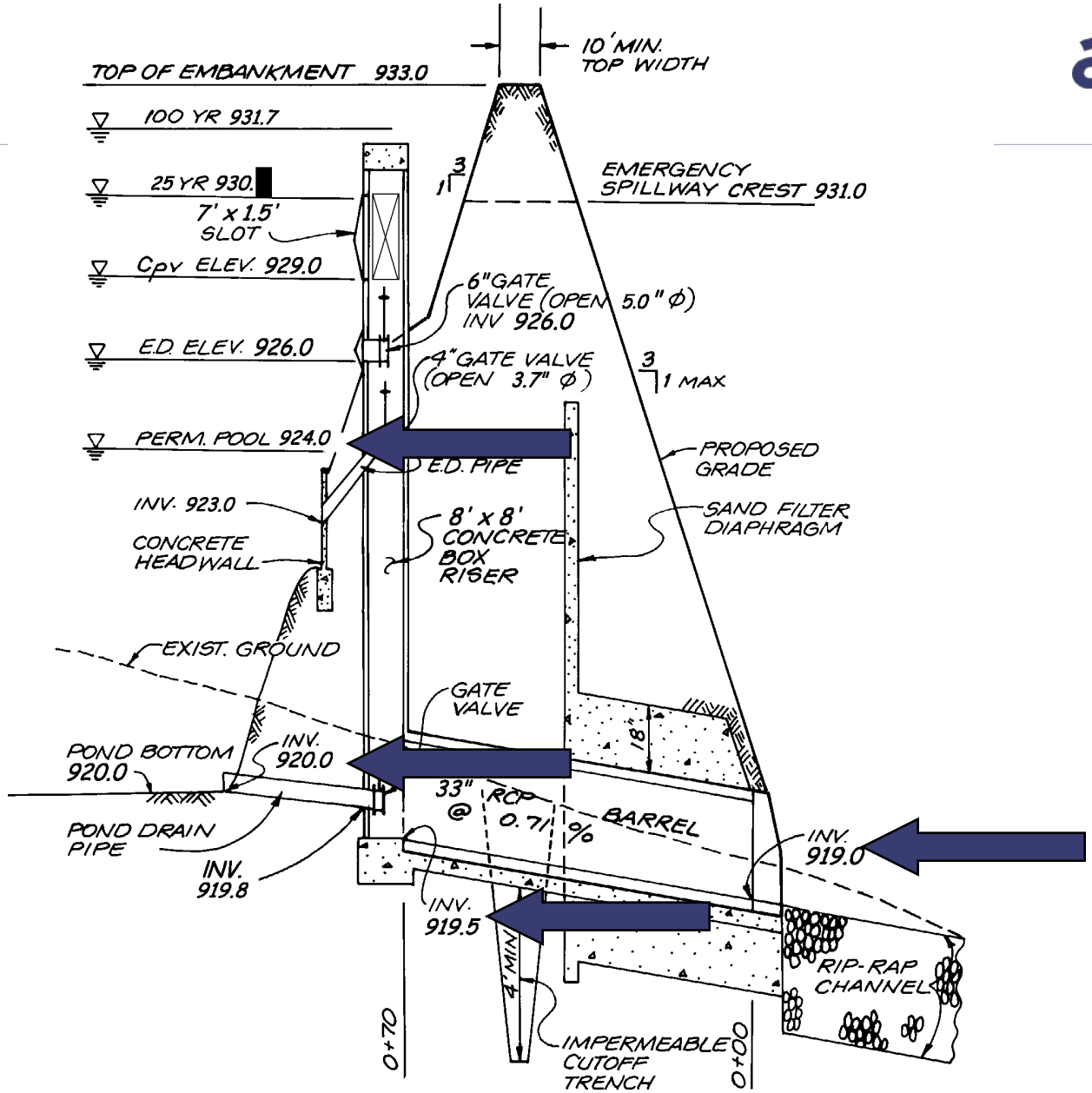
TOP OF EMBANKMENT 933.0
10' MIN. TOP WIDTH
100 YR 931.7
25 YR 930.
7' x 1.5' SLOT
CPV ELEV. 929.0
E.D. ELEV. 926.0
PERM. POOL 924.0
3
1
EMERGENCY SPILLWAY CREST 931.0
6" GATE VALVE (OPEN 5.0" Ø) INV 926.0
4" GATE VALVE (OPEN 3.7" Ø)
3
1 MAX
PROPOSED GRADE
E.D. PIPE
INV. 923.0
CONCRETE HEADWALL
8' x 8' CONCRETE BOX RISER
SAND FILTER DIAPHRAGM
EXIST. GROUND
GATE VALVE
18"
POND BOTTOM 920.0
INV. 920.0
33" RCP @ 0.71% BARREL
POND DRAIN PIPE
INV. 919.8
INV. 919.0
INV. 919.5
4' MIN
RIP-RAP CHANNEL
0+70
IMPERMEABLE CUTOFF TRENCH
0+00

Step 16: Final stage-discharge table:

	Riser				Pipe		Spillway	
Elevation	WQ	Cp	Slot - Ori	Slot - Weir	Barrel-Inlet	Barrel-Pipe	Spillway	Total
924	0							0
925	0.33							0.33
925.5	0.42							0.42
926	0.49	0						0.49
926.5	0.55	0.36						0.91
927	0.61	0.6						1.2
927.5	0.66	0.76						1.42
928	0.71	0.9						1.6
928.5	0.75	1.01						1.76
929	0.79	1.12		0				1.91
929.5	0.83	1.22		30.7				32.7
930	0.87	1.3		86.8				89
930.1	0.88	1.32		100.1	88	112.6		90.2
930.5	0.91	1.39	175	159.5	90	114.9		92.3
931					92.5	117.7	0	92.5
931.5					95	120.4	24	119
932					97	123.1	79	176
932.5					100	125.7	154	253.5
933					101.7	128.3	252	353.7

Steps 1 & 2 : Water quality volume estimation:

Compute Water Quality Volume, WQ_v

- <u>Compute Runoff Coefficient, R_v</u>

R_v = 0.05 + (I) (0.009)
= 0.05 + (36.3) (0.009) = **<u>0.38</u>**

- <u>Compute WQ_v</u>

WQ_v = (1.2”) (R_v) (A)/12
= (1.2”) (0.38) (38.0 ac) (1ft/12in)
= **<u>1.44 ac-ft</u>**

Steps 1 & 2 : Water quality volume estimation:

Summary

Area + Imperviousness + Rain = Volume

Area + Depth = Volume

watch your units!

Step 3 - Channel protection volume estimation:

Part A: Compute Channel Protection Vol., (Cp_v)

- Ia = 0.2S and S = 1000/CN –10
  CN = 78, Ia = **<u>0.564</u>**
- P = 3.4 inches (1-yr storm)
  Ia/P = (0.564)/ 3.4 inches = 0.17
- T_c = 0.17 hrs for developed conditions

With these values go to chart on p. 2.1-30

- q_u = **<u>800 csm/in</u>** (Type II Storm)

P 2.1-30

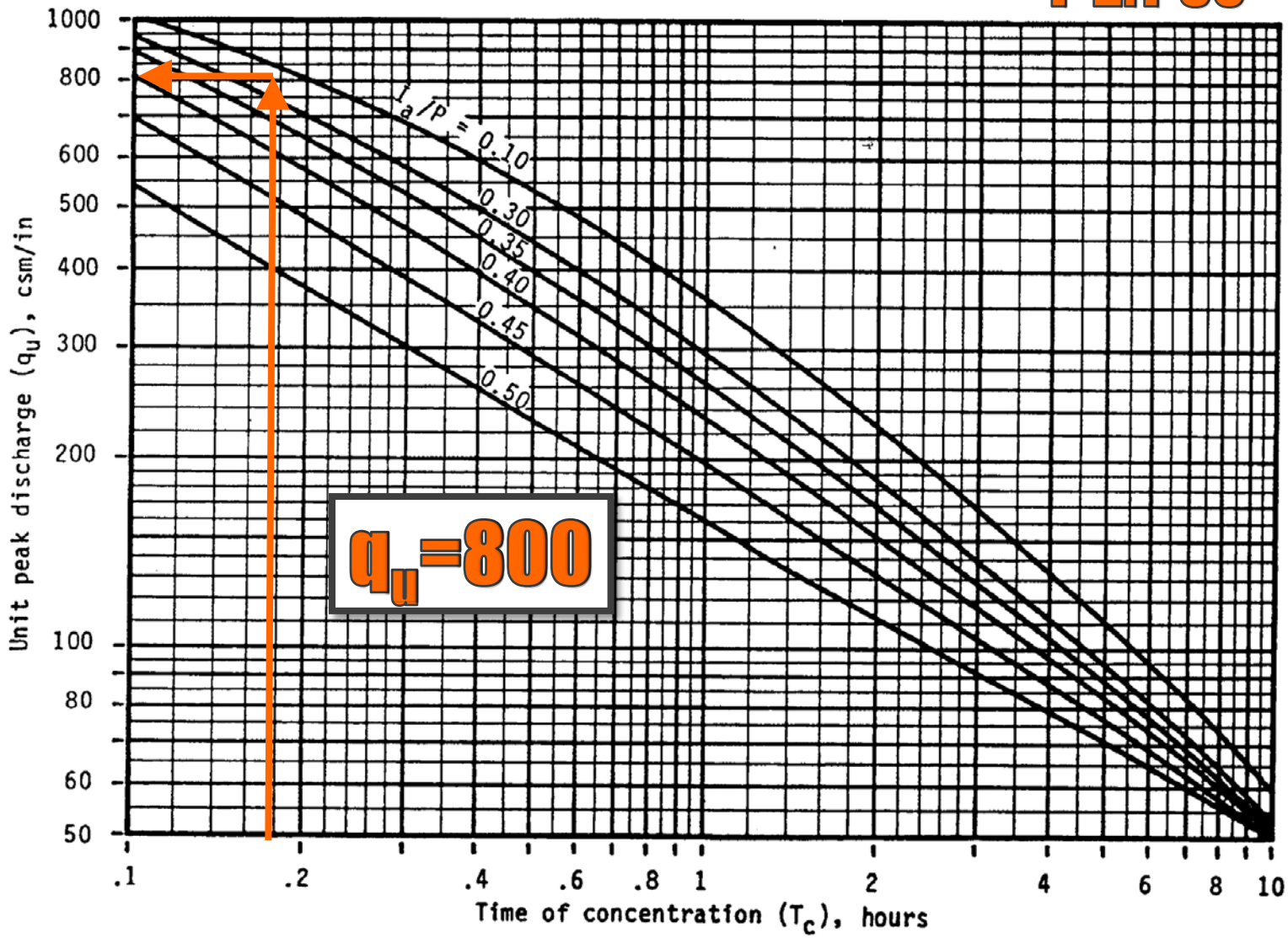
1000
800
600
500
400
300
200
100
80
60
50
Unit peak discharge (q_u), csm/in
I_a/P = 0.10
0.30
0.35
0.40
0.45
0.50
q_u=800
.1
.2
.4
.6
.8
1
2
4
6
8
10
Time of concentration (T_c), hours

Step 3A (CPv): Summary

****Use <u>Post</u>-Development Info (CN)**

Higher Tc, less flashy…
…lower qu

Lower Ia (higher CN), greater peak…
…higher qu

Step 3B: Pre- > Post-….

Given: q_u and (over-) deten. time (T)…

Find: q_o/q_i for 24-hr release time

- **Go to p. 2.2-10 figure**
- **Peak outflow/inflow (q_o/q_i) = 0.022**

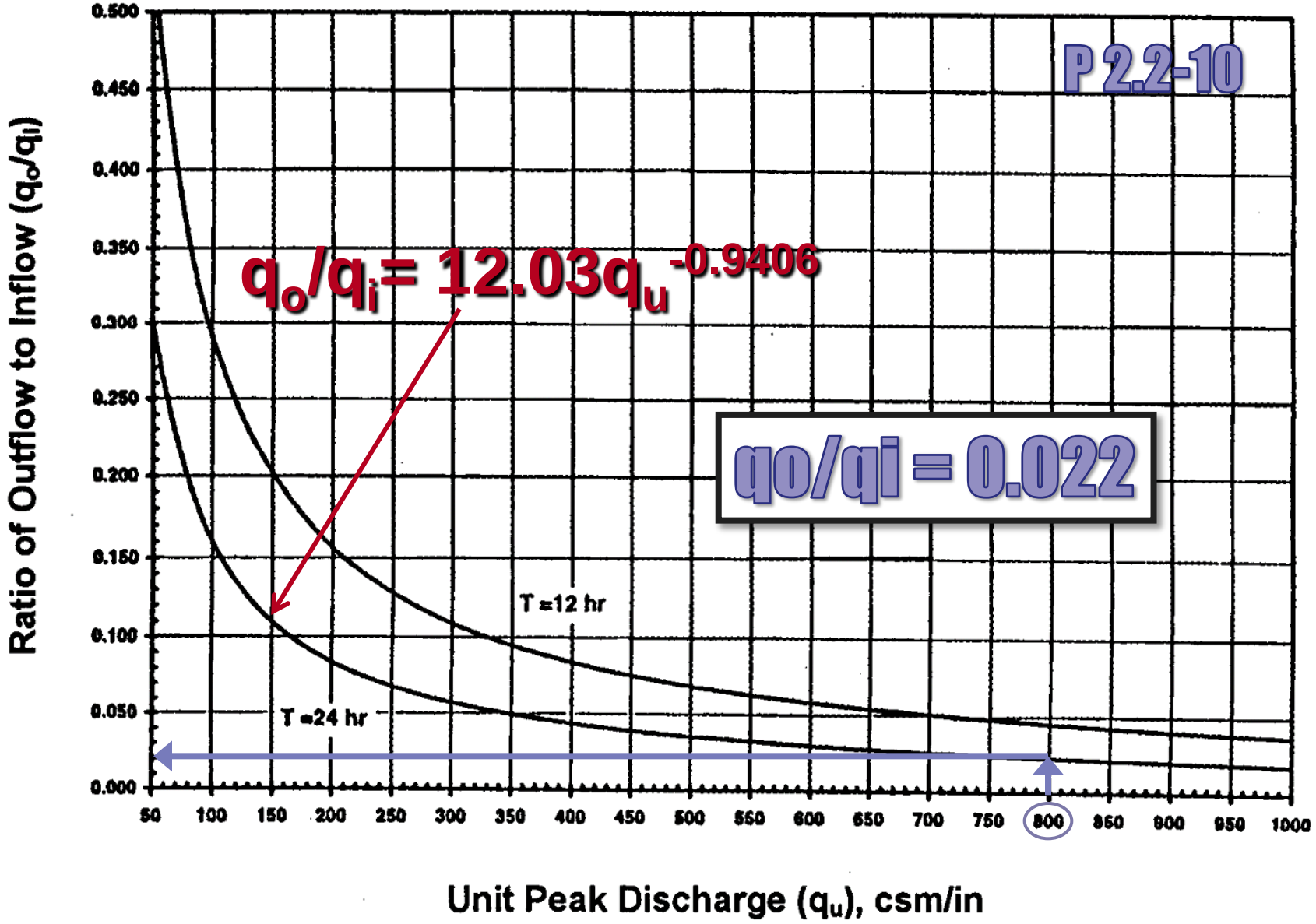
P 2.2-10
$q_o/q_i = 12.03q_u^{-0.9406}$
qo/qi = 0.022
T =12 hr
T =24 hr
Ratio of Outflow to Inflow (q_o/q_i)
Unit Peak Discharge (q_u), csm/in
0.500
0.450
0.400
0.350
0.300
0.250
0.200
0.150
0.100
0.050
0.000
50
100
150
200
250
300
350
400
450
500
550
600
650
700
750
800
850
900
950
1000

Step 3B (CPv): Summary

Higher Detention Time, Lower Outflow
…Lower qo/qi…

Higher Peak Rates (qu), Higher Inflow
…Lower qo/qi

****Remember: qu related to post-devel...**
…inflow is <u>post</u>-devel rate.

Step 3C: Extended Detention Estimated Volume

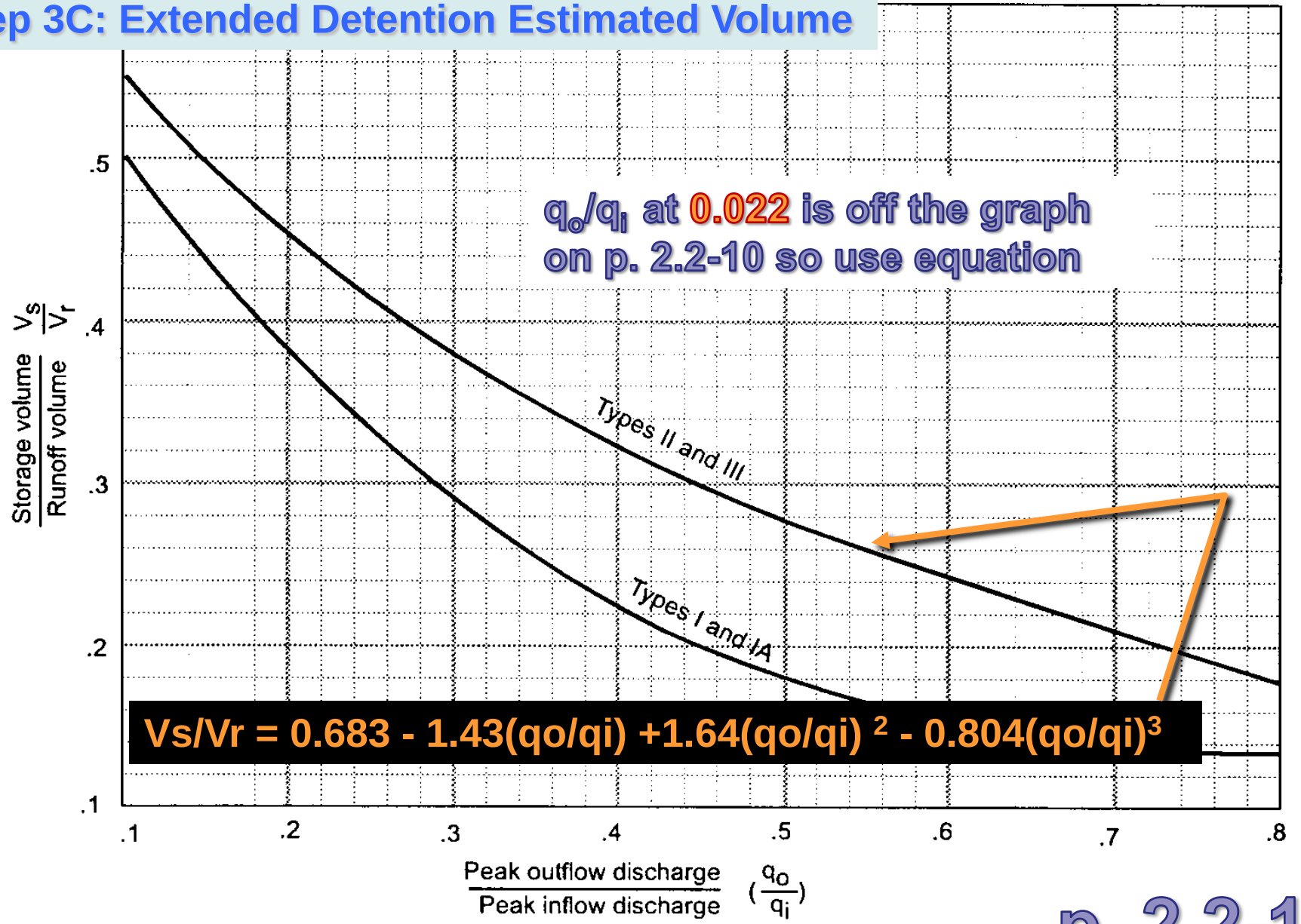

$$V_s/V_r = 0.683 - 1.43(q_o/q_i) + 1.64(q_o/q_i)^2 - 0.804(q_o/q_i)^3$$

p. 2.2-10

Step 3C (CPv): Summary

Higher Detention Time, <u>Lower Outflow</u>
…Lower qo/qi…
…Higher Vs/Vr = <u>more storage</u> needed

Higher Peak Rates (qu), <u>Higher Inflow</u>
…Lower qo/qi…
…Higher Vs/Vr = <u>more storage</u> needed

Step 3C: qo/qi at 0.022 is "off the chart"- use the equation…

- Vs = channel protection storage (Cp_v)
  Vr = volume of runoff in inches.

- $Vs/Vr = 0.683 - 1.43(q_o/q_i) + 1.64(q_o/q_i)^2 - 0.804(q_o/q_i)^3$
  $= 0.683 - 1.43\ (0.022) + 1.64\ (0.022)^2 - 0.804\ (0.022)^3$
  $= 0.65$

- $Vs = Cp_v = 0.65(1.4")(1/12)(38\ ac) = 2.9\ ac\text{-}ft$

$$Q = \frac{(P - 0.2S)^2}{(P + 0.8S)}$$

Where: S=1000/78 –10
P = 3.4 inches

Step 4: 25-yr volume for flood protection:

Goal: estimate the 25-yr storage volume <u>without</u> doing computer runs

We know Q-in and Q-out ratio (post- & pre- devel. Qs)…use the last chart (q_o/q_i).

25-year Storm Volume:

Given: Q_{in} = 202 cfs and Q_{out} = 101 cfs

Calculate: q_o/q_i= 101/202 = 0.5

Go to: p. 2.2-10, find V_s/V_r …= 0.28

*****Works for ANY 24-hr event!**

25-year Storm Volume:

Given: V_r= runoff volume = 12.69 ac-ft (see practice problem)

Calculate: V_s= storage volume = 12.69 x 0.28 = 3.55 ac-ft

But <u>experience</u> shows at least 15% low, so…

Q_{p25} storage = 3.55*1.15 = 4.1 ac-ft

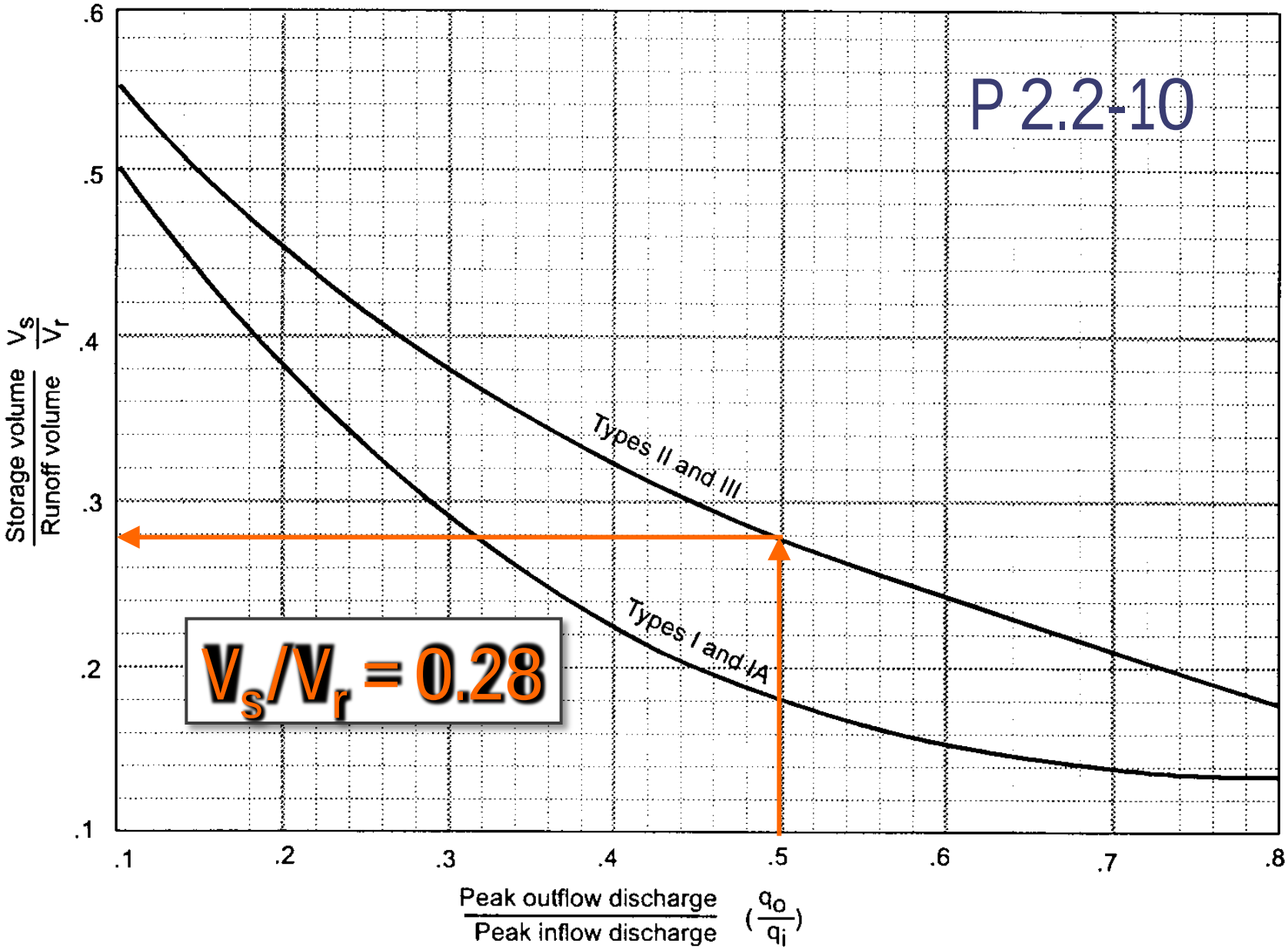
P 2.2-10
Storage volume / Runoff volume V_s/V_r
.6
.5
.4
.3
.2
.1
Types II and III
Types I and IA
$V_s/V_r = 0.28$
.1
.2
.3
.4
.5
.6
.7
.8
Peak outflow discharge / Peak inflow discharge (q_o/q_i)

Compute Control Volumes

Table 1. Summary of General Storage Requirements for Peachtree Meadows

Symbol	**Category**	**Volume Required** (ac - ft)	**Notes**
WQ_v	Water Quality Volume	1.44	
Cp_v	Stream Protection	2.9	Average ED release rate is 1.46 cfs over 24 hours
Q_p	Peak Control	4.10	25-year, in this case
Q_f	Flood Safe Passage	NA	provide safe passage for the 100 - year event in final design

Step 5. Is site appropriate for a stormwater pond?

Yes…

Step 6. Confirm local design criteria

WQ_v…Yes

Cp_v …Yes

$Q_{p\text{-}25}$ …Yes

Step 7: Pretreatment Volume and ED allocation:

Pretreatment Volume

Size forebay to treat 0.1"/imp acre
(13.8 ac) (0.1") (1'/12") = 0.12 ac-ft

(forebay volume is included in WQ_v)

Allocation of permanent pool volume and ED volume

Size pool to contain 50% of WQ_v:
$0.5 \times (1.44$ ac-ft) = 0.72 ac-ft.

(includes 0.12 ac-ft of forebay volume)

WQv-ED volume = 0.72 ac-ft

Step 8: Pond layout and grading:

<u>Determine pond location</u>
<u>Perform basic grading for permanent pool and ED storage</u>

Determination of elevation-storage relationship

Set basic elevations for pond structures

Size WQv-ED orifice

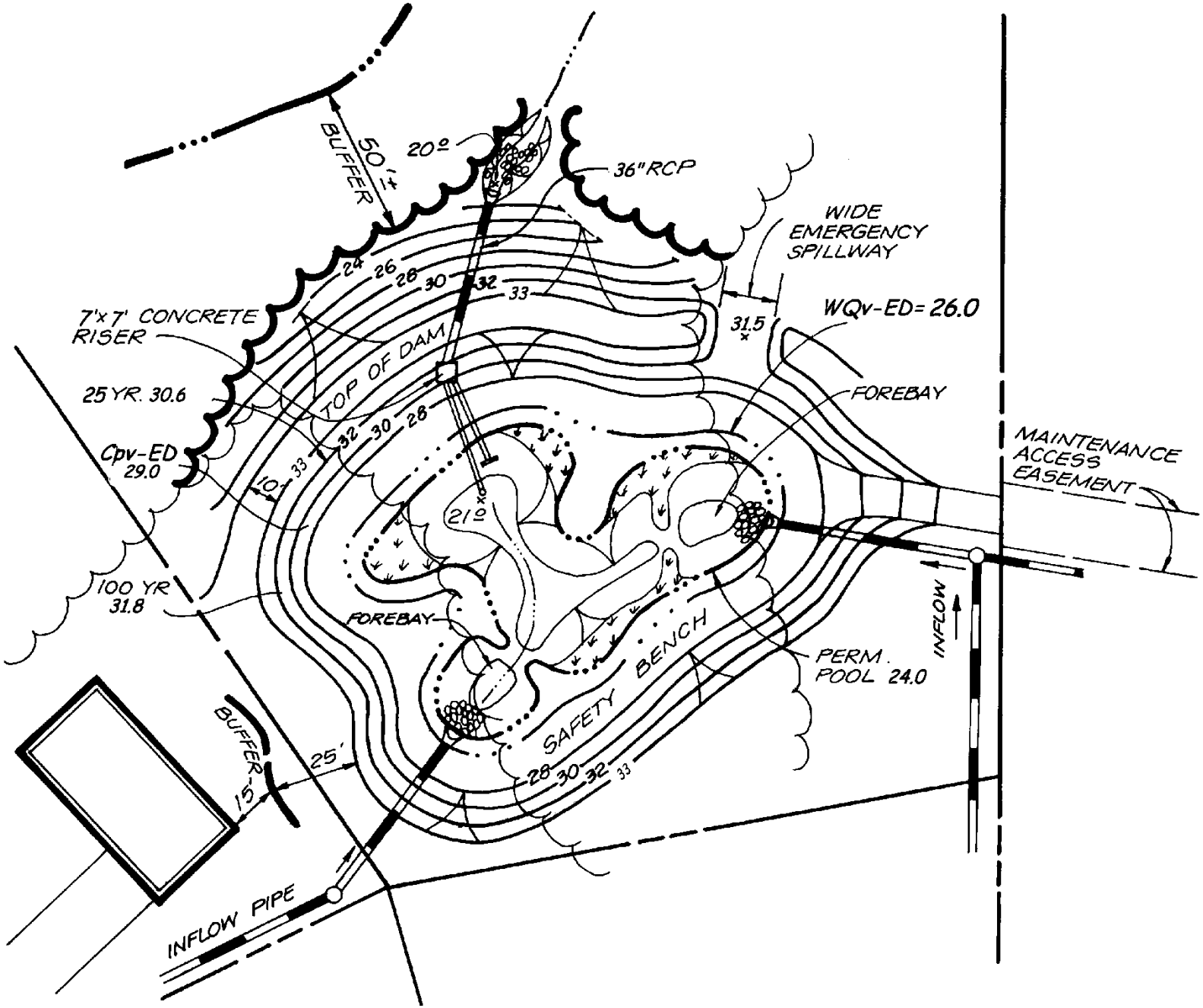
BUFFER
50'±
20º
36" RCP
WIDE
EMERGENCY
SPILLWAY
24
26
28
30
32
33
7'x 7' CONCRETE
RISER
TOP OF DAM
31.5
WQv-ED= 26.0
FOREBAY
25 YR. 30.6
Cpv-ED
29.0
10
33
32
30
28
MAINTENANCE
ACCESS
EASEMENT
21º
100 YR
31.8
FOREBAY
SAFETY BENCH
INFLOW
PERM.
POOL 24.0
BUFFER
15'
25'
28
30
32
33
INFLOW PIPE

Step 9: Water quality/ED WSEL setting:

Pond bottom set at elev 920.0.

Set riser invert = 919.5, barrel invert = 919

Req'd perm. pool vol = 0.72 ac-ft.
From site grading, = elev 924.0

<u>Set perm. pool water surface elev = 924.0</u>

Note: when you have a permanent pool the CPv and Qp25/Qf must be designed for the full volume above the pool to achieve attenuation

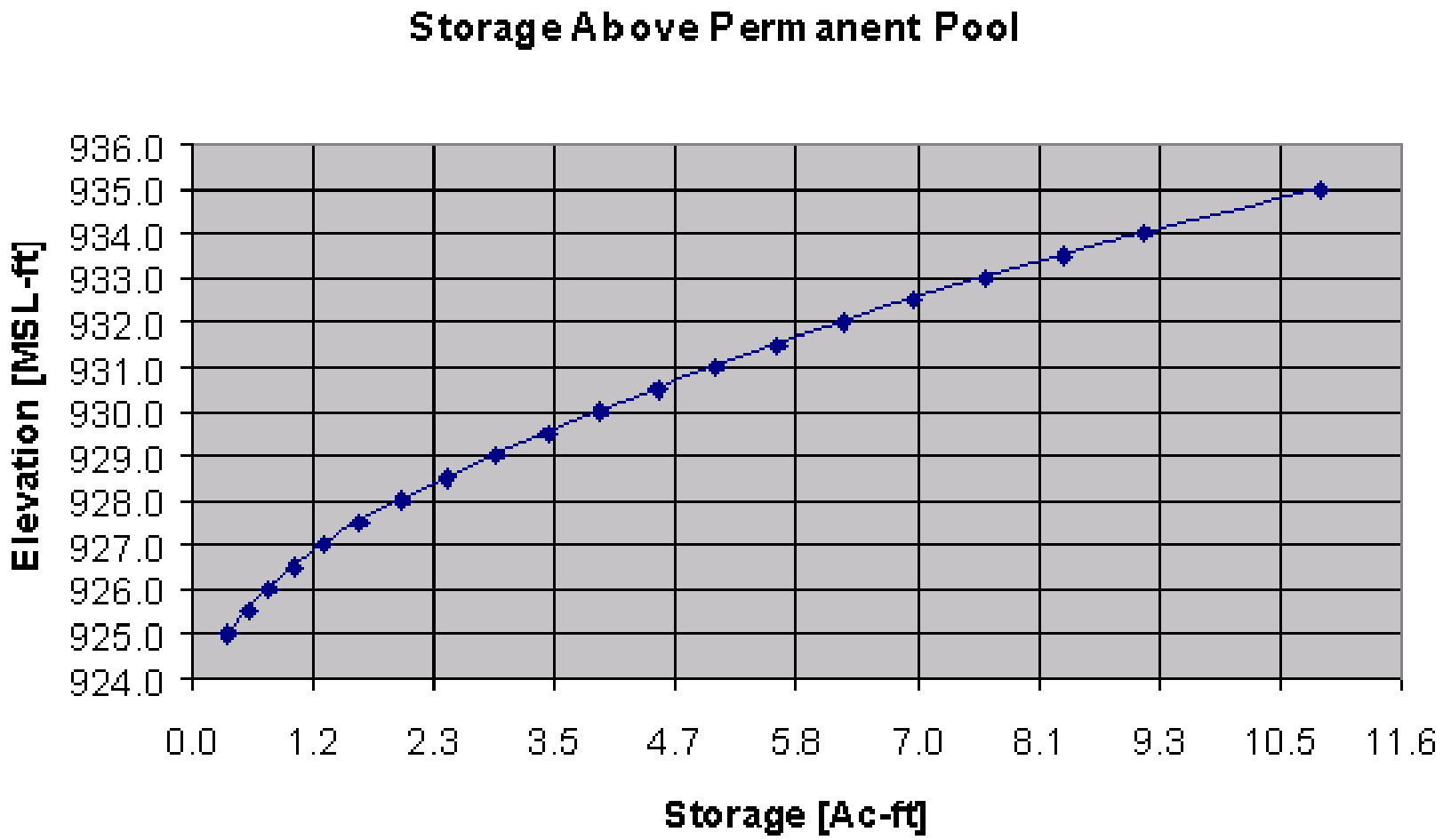

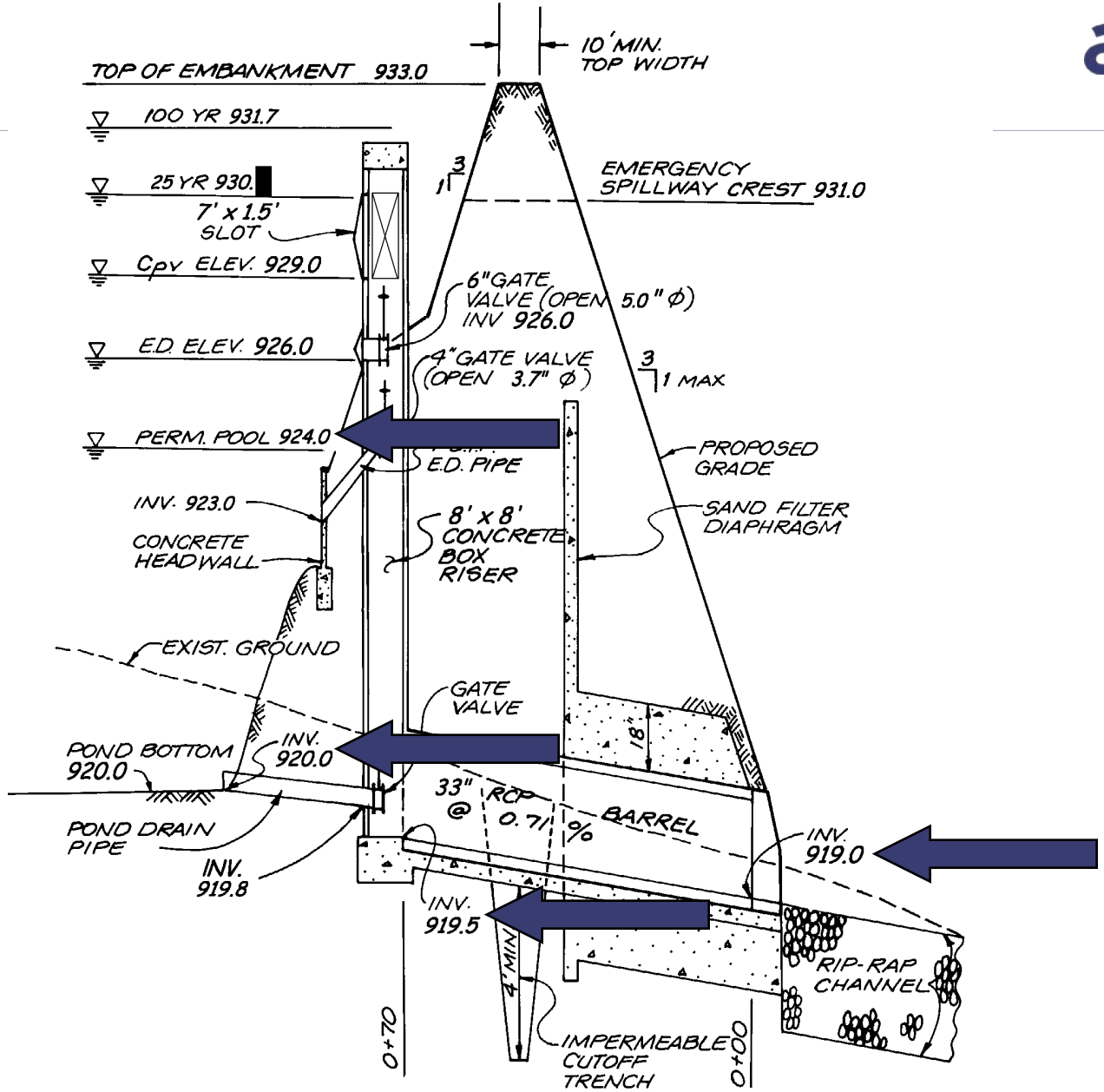
TOP OF EMBANKMENT 933.0
10' MIN. TOP WIDTH
100 YR 931.7
25 YR 930.
7' x 1.5' SLOT
Cpv ELEV. 929.0
E.D. ELEV. 926.0
PERM. POOL 924.0
3
1
EMERGENCY SPILLWAY CREST 931.0
6" GATE VALVE (OPEN 5.0" Ø) INV 926.0
4" GATE VALVE (OPEN 3.7" Ø)
3
1 MAX
E.D. PIPE
PROPOSED GRADE
INV. 923.0
CONCRETE HEADWALL
8' x 8' CONCRETE BOX RISER
SAND FILTER DIAPHRAGM
EXIST. GROUND
GATE VALVE
18"
POND BOTTOM 920.0
INV. 920.0
33" RCP @ 0.71% BARREL
POND DRAIN PIPE
INV. 919.8
INV. 919.0
INV. 919.5
4' MIN
RIP-RAP CHANNEL
0+70
IMPERMEABLE CUTOFF TRENCH
0+00

Copyright 2000, CWP

Step 10: Water quality/ED volume setting:

Req'd WQ_v-ED= 0.72 ac-ft.

Check elev-storage table: elev 926.0

<u>Set ED wse = 926.0</u>

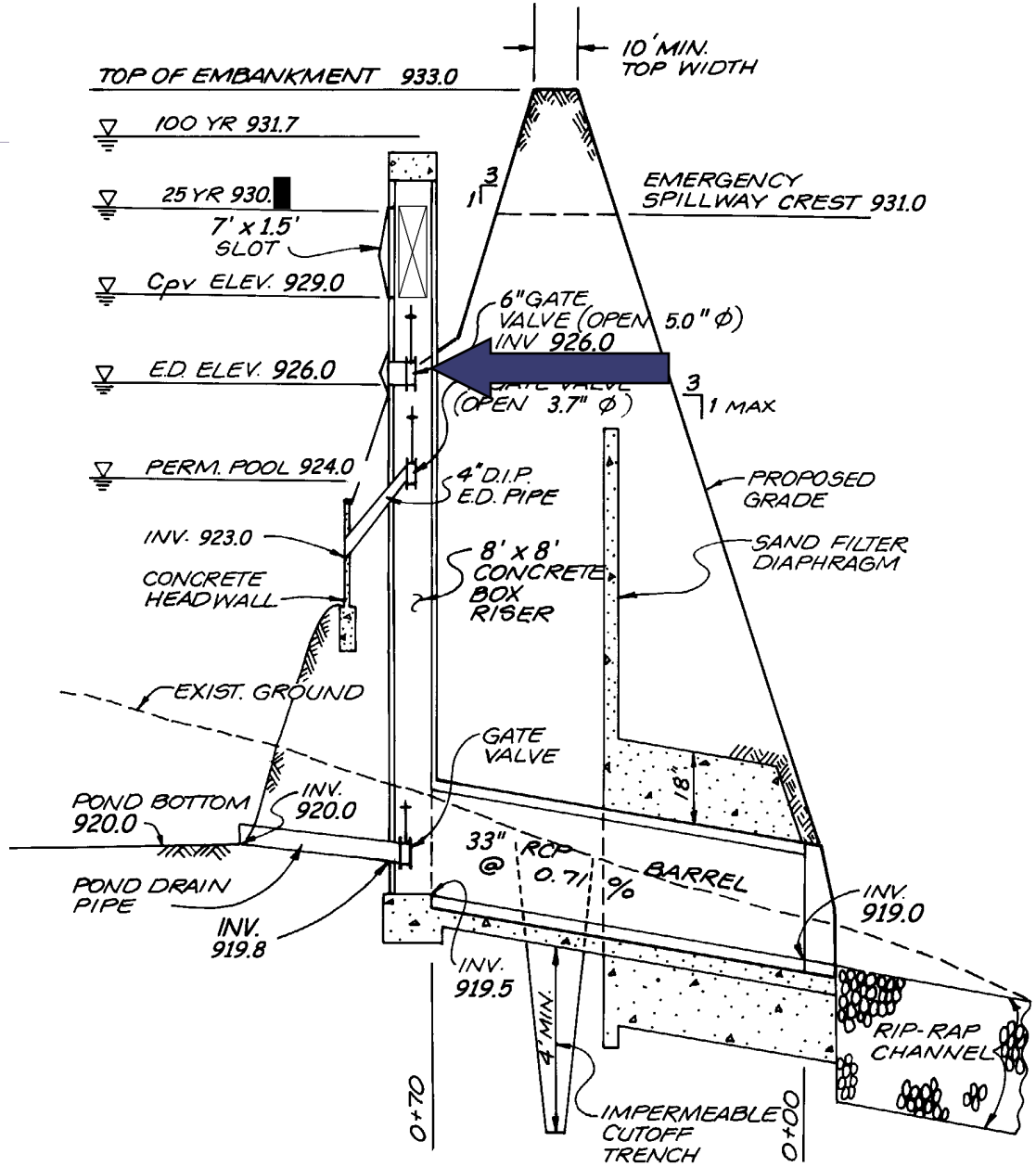
TOP OF EMBANKMENT 933.0
10' MIN. TOP WIDTH
100 YR 931.7
25 YR 930.
7' x 1.5' SLOT
Cpv ELEV. 929.0
E.D. ELEV. 926.0
PERM. POOL 924.0
INV. 923.0
CONCRETE HEADWALL
EXIST. GROUND
POND BOTTOM 920.0
INV. 920.0
POND DRAIN PIPE
INV. 919.8
3
1
EMERGENCY SPILLWAY CREST 931.0
6" GATE VALVE (OPEN 5.0" Ø)
INV 926.0
(OPEN 3.7" Ø)
3
1 MAX
4" D.I.P. E.D. PIPE
8' x 8' CONCRETE BOX RISER
PROPOSED GRADE
SAND FILTER DIAPHRAGM
GATE VALVE
18"
33" RCP @ 0.71 % BARREL
INV. 919.5
INV. 919.0
4' MIN.
IMPERMEABLE CUTOFF TRENCH
RIP-RAP CHANNEL
0+70
0+00

Step 11: Water quality/ED orifice sizing:

WQ_v-ED orifice to release 0.72 af in 24 hrs

Q = 0.72 ac-ft (43,560 ft^2/ac)/(24 hr)(3600 sec/hr)
= 0.36 cfs average discharge

Set orifice invert at elev 924.0

Average head = (926.0 - 924.0)/ 2 = 1.0'

$Q = CA(2gh)^{0.5}$, for h = 1.0; C = 0.6

Solve for A…Dia = 3.7"….<u>4" pipe w/ 4" gate valve</u>

Copyright 2000, CWP

Water quality orifice discharge equation:

$$Q_{WQv\text{-}ED} = (0.6)\ (0.075\ ft^2)\ [((2)(32.2\ ft/s^2))^{0.5}]\ (h^{0.5}),$$

$$\underline{Q = (0.36)\ h^{0.5};\ h = wsel - 924.16}$$

(Note: account for ½ of orifice diameter when calculating head)

Step 12: Channel protection WSEL:

<u>Compute release rate for Cp_v-ED control and establish Cp_v elevation</u>

Req'd Cp_v storage = 2.9 ac-ft.
From the elev-storage table, = elev 929
<u>Set Cp_v wsel = 929</u>

Size outlet to release 1.46 cfs (see unified sizing exercise in Step 1) @ elev. 929.

Set orifice invert at elev 926.0

Step 13: Channel protection orifice size:

@ wsel 929,

WQ_v-ED orifice releases 0.66 cfs,

Cp_v-ED orifice = 1.46 -0.66 = 0.80 cfs

Head = (929 - 926.0)/2 = 1.5'

$Q = CA(2gh)^{0.5}$, for h = 1.5'

$A = 0.80 \text{ cfs} / [(0.6)((2)(32.2'/s^2)(1.5'))^{0.5}]$

$A = 0.14 \text{ ft}^2$; dia. = 0.42 ft = 5.0“

Use 6" pipe with 6" gate valve

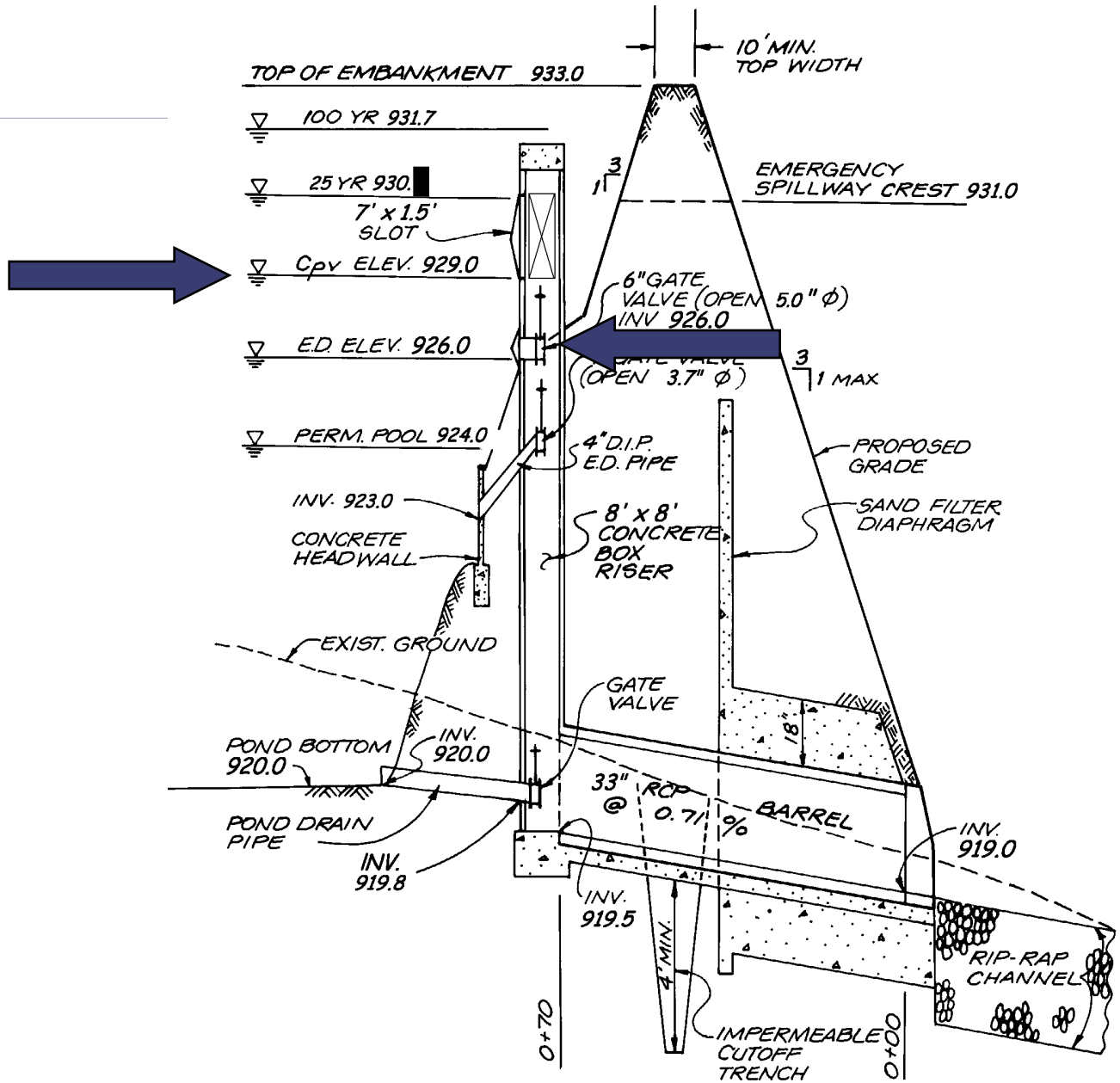
TOP OF EMBANKMENT 933.0
10' MIN. TOP WIDTH
100 YR 931.7
25 YR 930.
7' x 1.5' SLOT
Cpv ELEV. 929.0
E.D. ELEV. 926.0
PERM. POOL 924.0
INV. 923.0
CONCRETE HEADWALL
EXIST. GROUND
POND BOTTOM 920.0
INV. 920.0
POND DRAIN PIPE
INV. 919.8
3
1
EMERGENCY SPILLWAY CREST 931.0
6" GATE VALVE (OPEN 5.0" Ø)
INV 926.0
(OPEN 3.7" Ø)
3
1 MAX
4" D.I.P. E.D. PIPE
8' x 8' CONCRETE BOX RISER
PROPOSED GRADE
SAND FILTER DIAPHRAGM
GATE VALVE
18"
33" RCP @ 0.71% BARREL
INV. 919.5
INV. 919.0
4' MIN.
IMPERMEABLE CUTOFF TRENCH
RIP-RAP CHANNEL
0+70
0+00

Channel protection orifice discharge equation:

$$Q = (0.6)(0.14\ ft^2)[((2)(32.2'/s^2))^{0.5}]\ (h^{0.5})$$

$$\underline{Q_{Cpv\text{-}ED} = (0.67)\ (h^{0.5});\ h = wsel - 926.21}$$

(Note: account for one half of orifice diameter when calculating head)

Step 14: 25-yr storm WSEL:

<u>Calculate Q_{25} release rate and water surface elev</u>

The 25 yr storage volume is 4.1 ac-ft.

From elev-storage table: elev. 930.1

Size 25 yr slot to release 101 cfs at elev. 930.1

Set invert at elev. 929.0 (the CPv elevation)

25-yr storm slot sizing:

@ wsel 930.1

WQ_v-ED orifice releases 0.88 cfs

Cp_v-ED orifice releases 1.32 cfs

Q = 101 cfs - (.88 + 1.32) = 99 cfs.

Max head = (930.1 – 929) = 1.1'

$Q = CLH^{3/2}$ (C=3.1 H=1.1' Q=99 cfs)

$L = 99 \text{ cfs} / (3.1)(1.1^{3/2}) = 27.7 \text{ ft}$

<u>Use open top riser with four 7.0' x 1.5'slots</u>

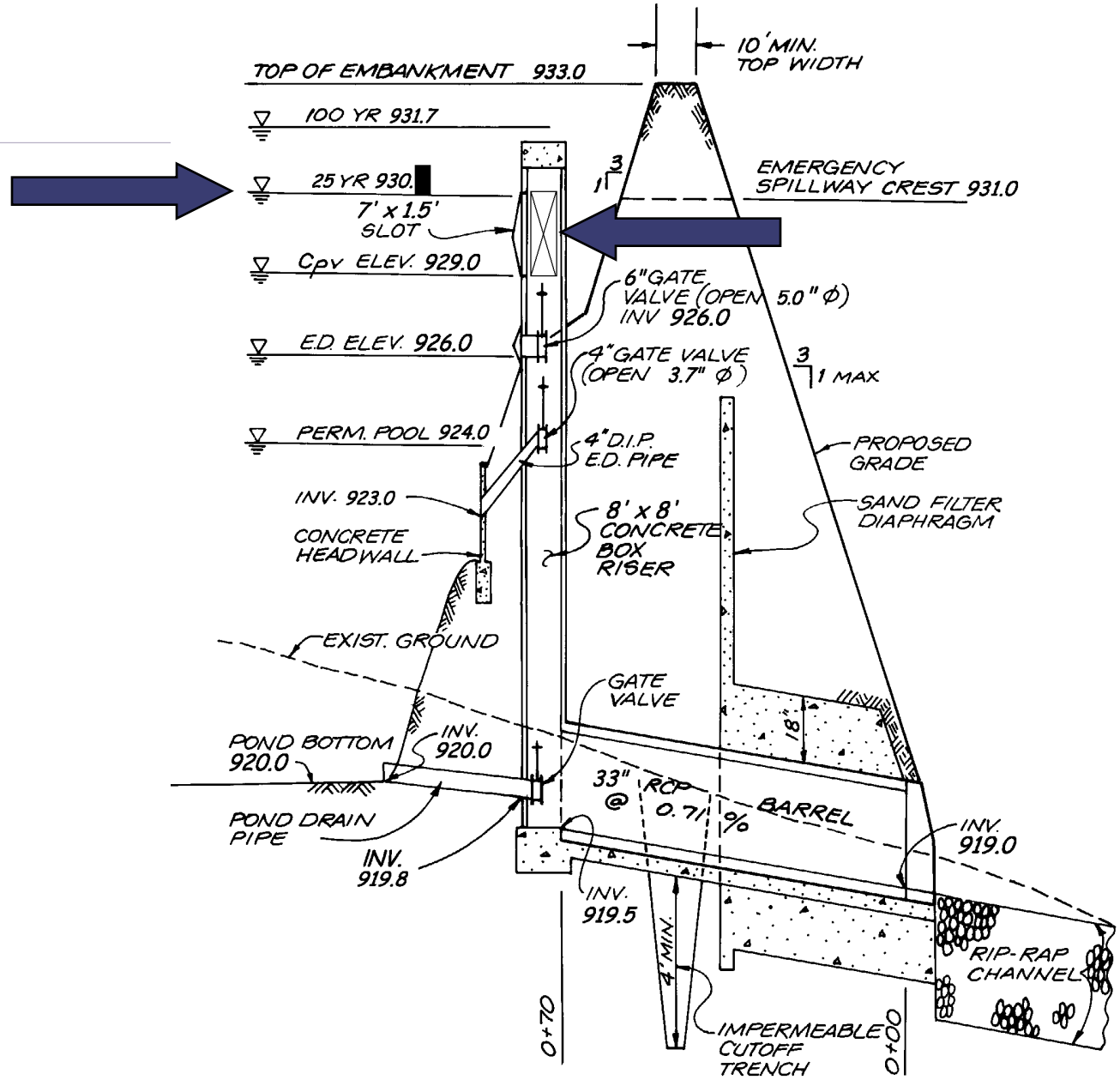
TOP OF EMBANKMENT 933.0
10' MIN. TOP WIDTH
100 YR 931.7
25 YR 930.
7' x 1.5' SLOT
3
1
EMERGENCY SPILLWAY CREST 931.0
CPV ELEV. 929.0
6" GATE VALVE (OPEN 5.0" Ø) INV 926.0
E.D. ELEV. 926.0
4" GATE VALVE (OPEN 3.7" Ø)
3
1 MAX
PERM. POOL 924.0
4" D.I.P. E.D. PIPE
PROPOSED GRADE
INV. 923.0
8' x 8' CONCRETE BOX RISER
SAND FILTER DIAPHRAGM
CONCRETE HEADWALL
EXIST. GROUND
GATE VALVE
18"
POND BOTTOM 920.0
INV. 920.0
33" RCP @ 0.71 % BARREL
POND DRAIN PIPE
INV. 919.8
INV. 919.0
INV. 919.5
4' MIN.
RIP-RAP CHANNEL
0+70
IMPERMEABLE CUTOFF TRENCH
0+00

Copyright 2000, CWP

Step 15: 25-yr storm slot sizing, control check:

Check orifice equation using cross-sectional area of opening

$Q = CA(2gh)^{0.5}$, for h = 0.75'
$A = 4\ (7.0')\ (1.5') = 42.0\ ft^2$
$Q = 0.6\ (42.0\ ft^2)\ [(64.4)(0.75)]^{0.5} = 175$ cfs > 99 cfs, so use weir equation

$Q_{25} = (3.1)\ (28')\ h^{3/2}$, $\underline{Q_{25} = (86.8)\ h^{3/2}}$, where h = wsel – 929.0

25-yr storm slot sizing, control check:

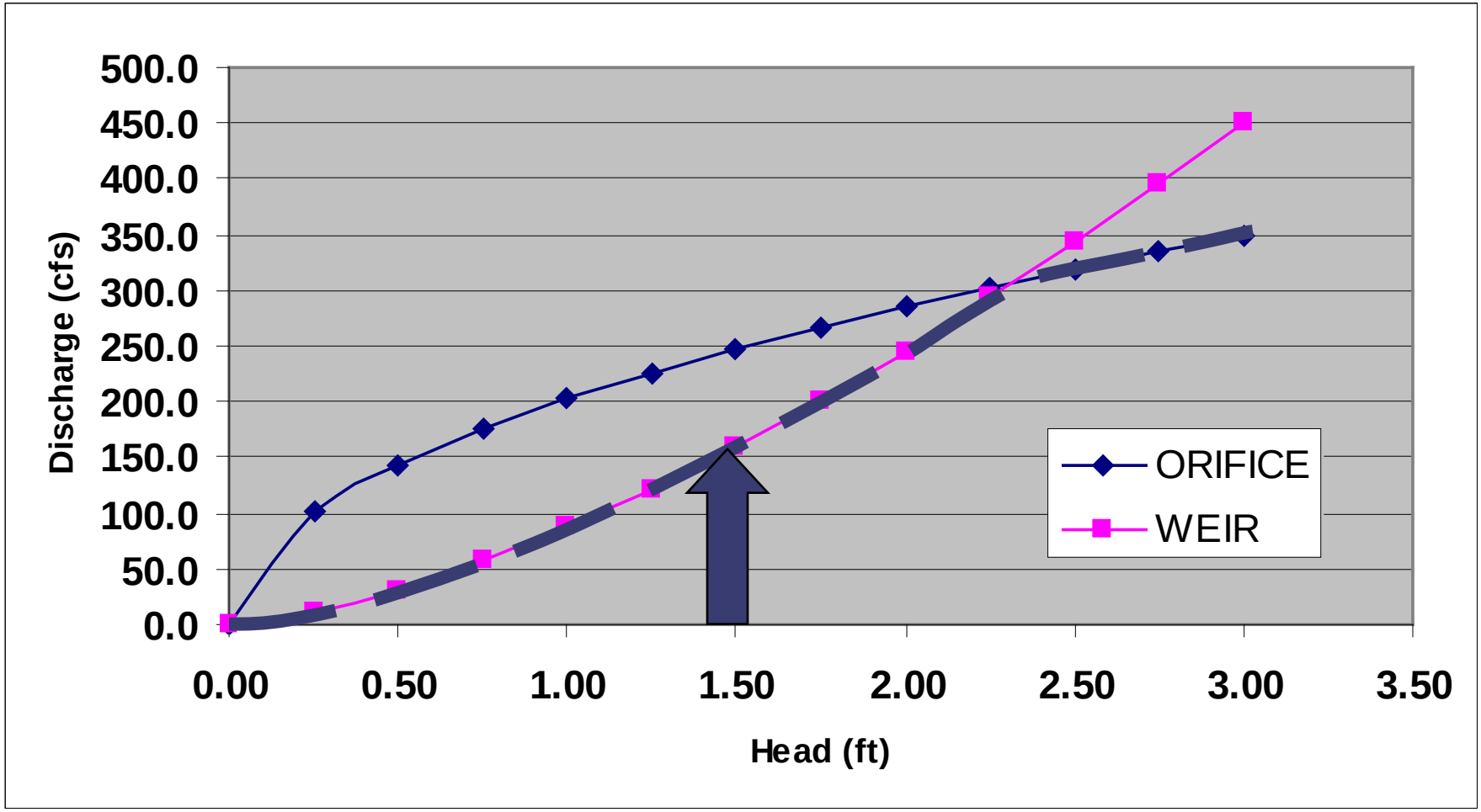

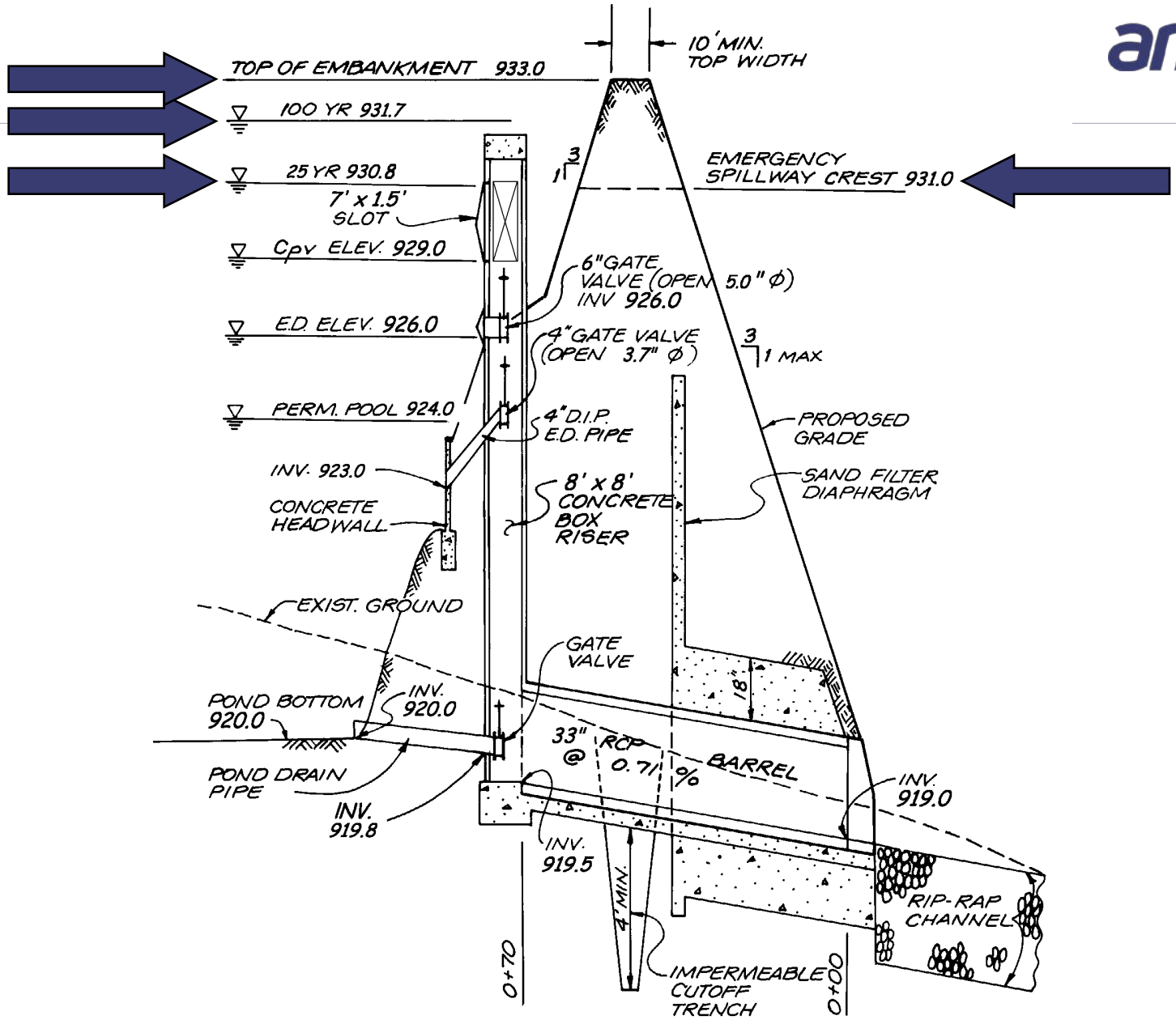
TOP OF EMBANKMENT 933.0
10' MIN. TOP WIDTH
100 YR 931.7
25 YR 930.8
7' x 1.5' SLOT
EMERGENCY SPILLWAY CREST 931.0
3
1
Cpv ELEV. 929.0
6" GATE VALVE (OPEN 5.0" ϕ) INV 926.0
E.D. ELEV. 926.0
4" GATE VALVE (OPEN 3.7" ϕ)
3
1 MAX
PERM. POOL 924.0
4" D.I.P. E.D. PIPE
PROPOSED GRADE
INV. 923.0
8' x 8' CONCRETE BOX RISER
SAND FILTER DIAPHRAGM
CONCRETE HEADWALL
EXIST. GROUND
GATE VALVE
18"
POND BOTTOM 920.0
INV. 920.0
33" RCP @ 0.71 % BARREL
POND DRAIN PIPE
INV. 919.8
INV. 919.0
INV. 919.5
4' MIN.
RIP-RAP CHANNEL
0+70
IMPERMEABLE CUTOFF TRENCH
0+00

Step 16: Final stage-discharge table:

	Riser				Pipe		Spillway	
Elevation	WQ	Cp	Slot - Ori	Slot - Weir	Barrel-Inlet	Barrel-Pipe	Spillway	Total
924	0							0
925	0.33							0.33
925.5	0.42							0.42
926	0.49	0						0.49
926.5	0.55	0.36						0.91
927	0.61	0.6						1.2
927.5	0.66	0.76						1.42
928	0.71	0.9						1.6
928.5	0.75	1.01						1.76
929	0.79	1.12		0				1.91
929.5	0.83	1.22		30.7				32.7
930	0.87	1.3		86.8				89
930.1	0.88	1.32		100.1	88	112.6		90.2
930.5	0.91	1.39	175	159.5	90	114.9		92.3
931					92.5	117.7	0	92.5
931.5					95	120.4	24	119
932					97	123.1	79	176
932.5					100	125.7	154	253.5
933					101.7	128.3	252	353.7

Discharges

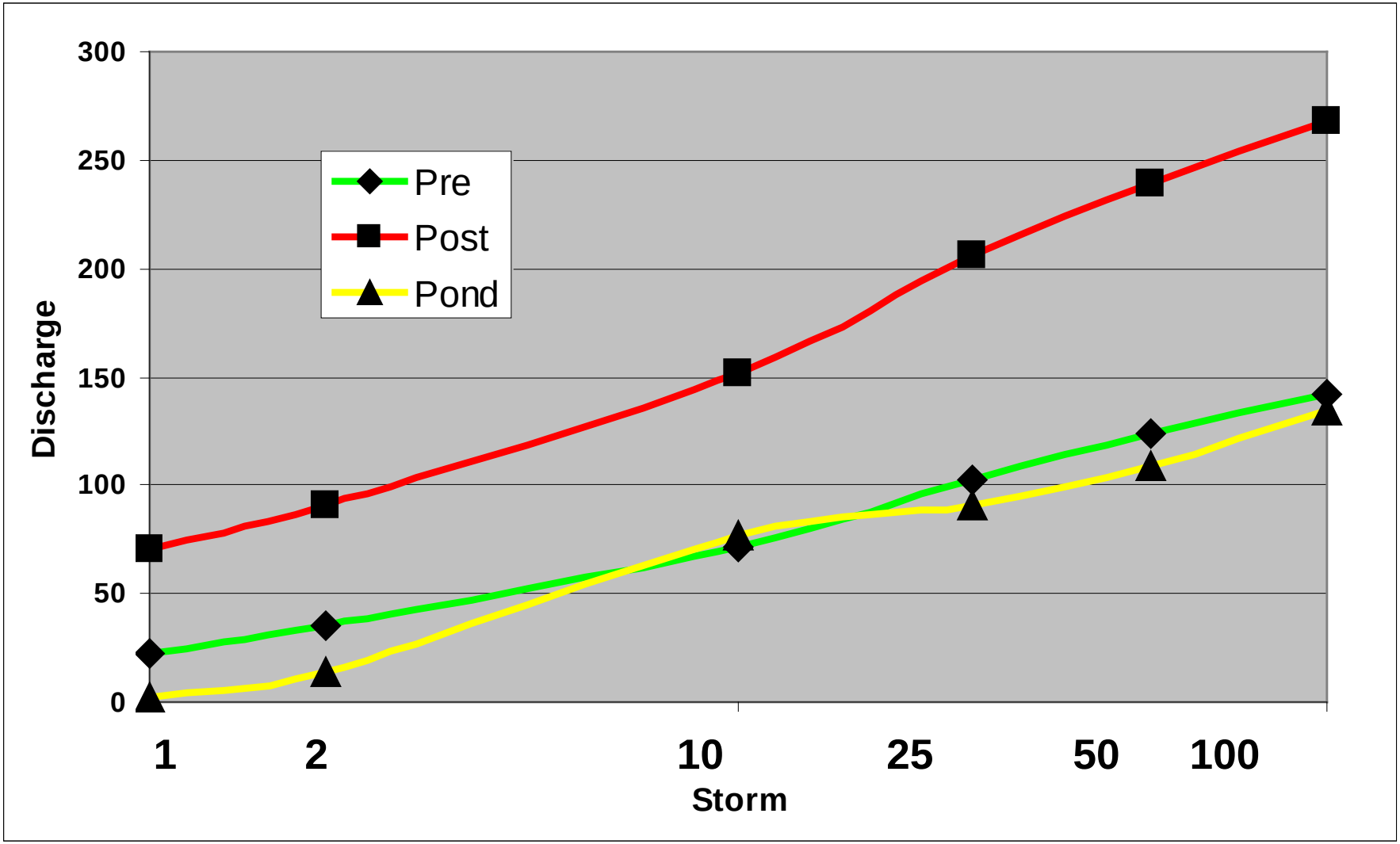
300
250
200
150
100
50
0
Discharge
Pre
Post
Pond
1
2
10
25
50
100
Storm

Questions?

What if I have Upland BMPs?

<u>Adjust your:</u>

-volumes

-stages (head)

-openings

What if I have BSD Credits?

<u>Adjust your:</u>

-volumes

-stages (head)

-openings

How do address CN reductions?

Adjust your:

-qi…will be lower (2- 100-yr)

…Higher qo/qi…

…Lower Vs/Vr = less storage needed

-stages (head)

-openings

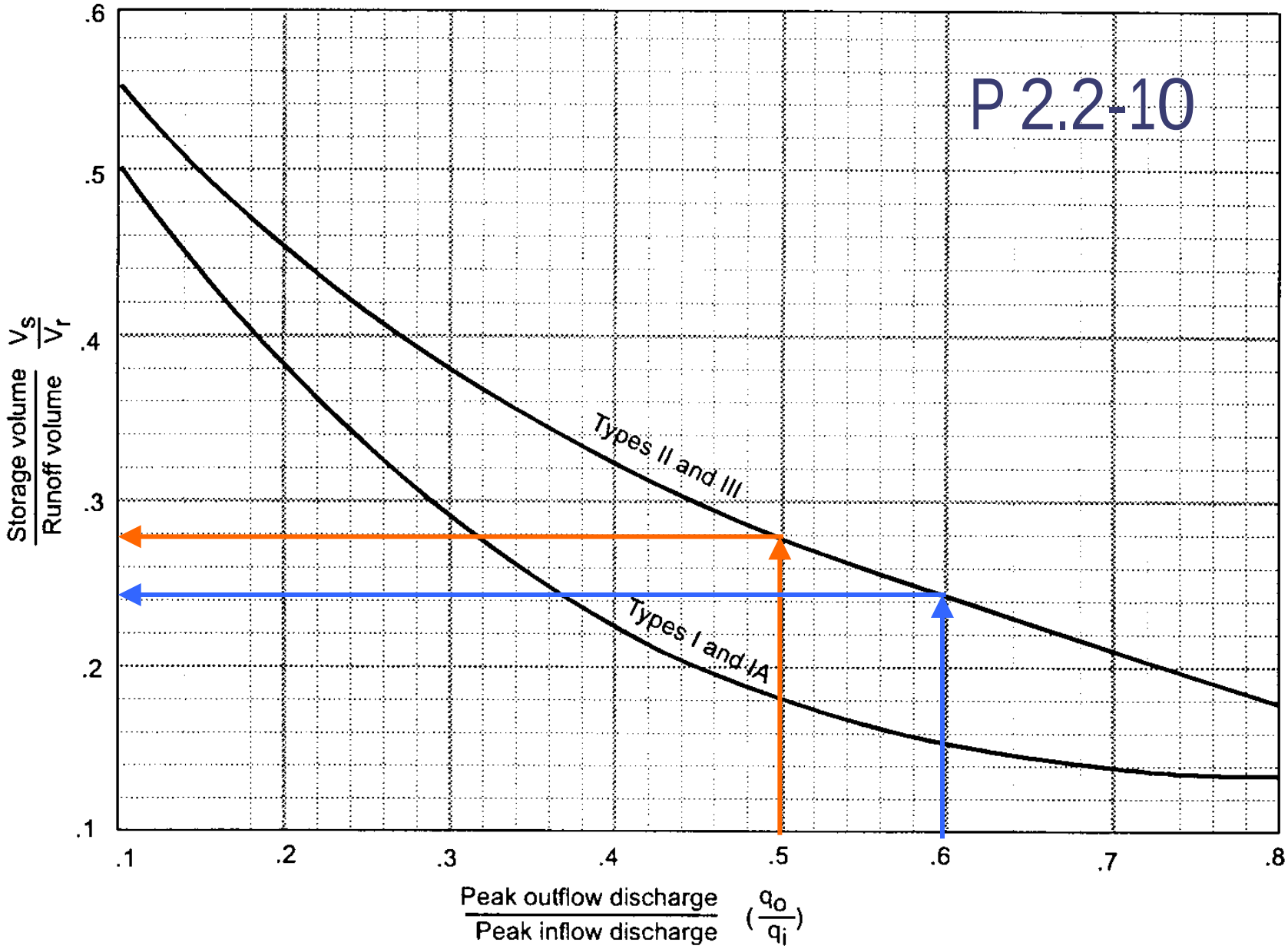
P 2.2-10
Storage volume / Runoff volume $\frac{V_s}{V_r}$
.6
.5
.4
.3
.2
.1
Types II and III
Types I and IA
.1
.2
.3
.4
.5
.6
.7
.8
Peak outflow discharge / Peak inflow discharge $(\frac{q_o}{q_i})$