DESIGN/DEVELOPMENT REVIEW COMMISSION

URBAN DESIGN REVIEW DISTRICT

EVALUATION SHEET

Case # 8

ADDRESS: **Public right-of-way near 1008 Harden**

APPLICANT: Ann Brooks, Crown Castle

TAX MAP REFERENCE: N/A

USE OF PROPERTY: Public right-of-way; existing SCE&G pole

REVIEW DISTRICT: Five Points Urban Design District

NATURE OF REQUEST: Request for Certificate of Design Approval for addition of wireless communication facility to existing pole location

FINDINGS/COMMENTS:

Ordinance Summary:

Section 17-283 of the City of Columbia Code of Ordinances provides regulations for the placement of wireless communication facilities. Until recently, these facilities have been placed almost exclusively on private property, and the review has been largely administered by staff as the applicable proposals have not, as a rule, had significant impacts on the public realm. Now, there are applications for installations within the public right-of-way, as the Certificate of Public Convenience and Necessity issued by the Public Service Commission of South Carolina allows for this placement. The task of this Commission is to determine whether the facilities meet the standards below. The entire ordinance has been included in your packet for additional information.

Sec. 283 (e) *Standards for DDRC approvals for WCFs.*

Where charged with review and approval, the DDRC shall, in considering applications for WCF's find that:
(1) The proposed WCF would emulate an architectural or landscape feature typical of, or appropriate to, the surrounding area.
(2) The proposed WCF would respect, and to the extent possible compliment, the style, height, bulk mass, material, and color of existing buildings, structures, vegetation or uses within the surrounding area;
(3) The proposed WCF would preserve existing vegetation;
(4) The proposed WCF would preserve scenic view sheds; and
(5) The proposed WCF would respect existing topography, including minimizing the extent to which the proposed WCF would be a dominant feature upon a hill, crest, ridgeline or other topographical high point.

Project Description:

The SCE&G pole on the east side of Harden Street, just north of Pendleton, is a self-weathering steel pole, without any streetlight or overhead power lines attached to it. It currently has 2 large plastic boxes attached to it at pedestrian level, as well as wires coming out of the top of the pole. The proposal for this facility includes:

- Replacing the existing metal pole (approximately 30' tall) with a new fiberglass pole (28'tall)
- Adding two-panel antenna at the top of the pole - dimensions have not been provided
- Adding (2) new RF warning signs
- Attaching (5) conduits (one 3", one 1", and three ¾") to the pole with steel straps
- Attaching (2) new RRUS (remote radio units) - dimensions have not been provided
- Attaching (2) new wideband quadraplexers – dimensions have not been provided
- Attaching (2) PSU (power supply units) – dimensions have not been provided
- Attaching (1) new outdoor Telco box
- Attaching one disconnect switch
- Attaching one meter

Analysis:

(1) The proposed WCF would emulate an architectural or landscape feature typical of, or appropriate to, the surrounding area.

This is an existing condition along Harden Street, a DOT right-of-way, but is not consistent with the light poles in the Five Points District, which are green metal decorative light poles.

Staff finds that the SCE&G poles are not appropriate to the area, as they are existing pole that have been in place since before the – 5P Overlay District was created. The decorative light poles on Harden are representative of utilities that are appropriate to the District. Since the applicant is removing the existing steel pole and replacing it with a new pole, a metal (or fiberglass) pole to match the color and detailing of the decorative street lights would be appropriate. This would also allow for the wiring to be concealed within the pole.

(2) The proposed WCF would respect, and to the extent possible compliment, the style, height, bulk, mass, material, and color of existing buildings, structures, vegetation or uses within the surrounding area;

The multiple conduits and utility boxes and equipment attached to the pole do not compliment the style, bulk, mass, material, or coloring of the existing structure on which they are attached. Aside from the antenna, which must be mounted at the top of the pole, the other equipment can feasibly be mounted remotely (within a few feet) of the pole. As there are already traffic control boxes on many streetscapes, providing a Hoffman enclosure to conceal the additional equipment would be more consistent with the existing features in the District. It could also provide an opportunity for District graphics as the traffic control boxes have. The antenna should be replaced with a more streamlined cylindrical antenna.

(3) The proposed WCF would preserve existing vegetation;

It should be confirmed that no vegetation is being removed as part of the proposal.

(4) The proposed WCF would preserve scenic view sheds; and

The number of attachments to the pole will have an impact on the visual environment as one looks down the street. Concealing the wiring within a new pole and having a remote enclosure to contain all of the other equipment would be beneficial. The antenna at the top of the pole should be replaced with a more streamlined cylindrical antenna.

(5) The proposed WCF would respect existing topography, including minimizing the extent to which the proposed WCF would be a dominant feature upon a hill, crest, ridgeline or other topographical high point.

The proposed facility is not at the top of a hill or ridgeline.

Staff recommendation:

To approve the request for installation of Wireless Communication Facilities in the proposed location, with the following conditions:

- The replacement pole be of metal *or* fiberglass, color and detailing to match the green decorative light poles in the Five Points District;
- *No* conduit or wiring will be attached to or visible on the exterior of the pole;
- The antenna at the top of the pole be a streamlined, cylindrical antenna;
- All other equipment and boxes be located in a remote enclosure, the location and design to be coordinated with staff;
- All new poles be the minimum height required to obtain the necessary clearances for the attached utilities;
- All other details to be deferred to staff.

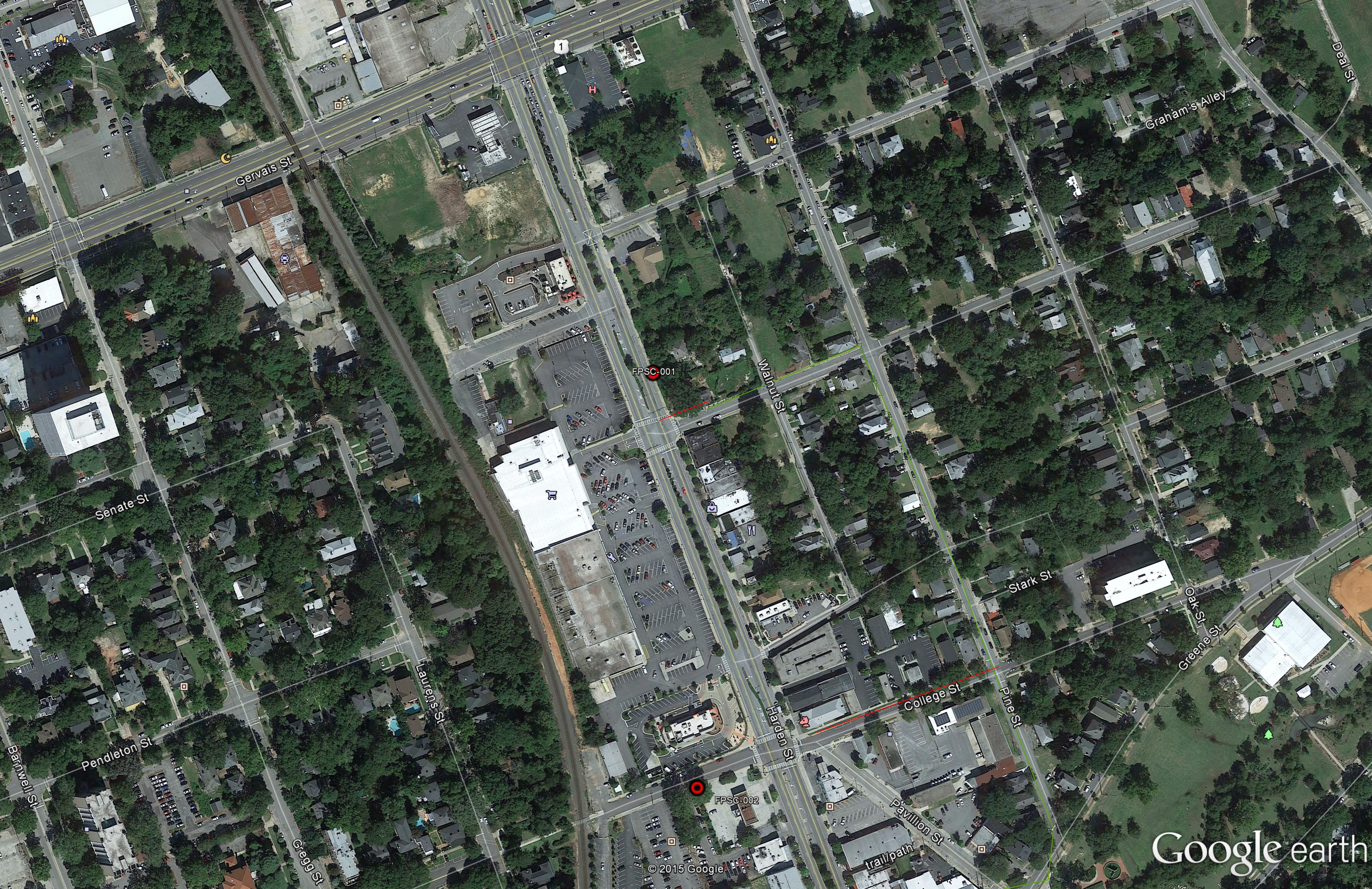
Gervais St
Senate St
Pendleton St
Barnwell St
Laurens St
Gregg St
Walnut St
Harden St
College St
Pine St
Stark St
Oak St
Greene St
Graham's Alley
Deal St
Pavillion St
trail/path
FPSC-001
FPSC-002
© 2015 Google
Google earth

© 2015 Google
© 2015 Google
Google earth

CLIENT : CROWN CASTLE

NODE ID#: **FPSC-001m2-A**

NEAR ADDRESS: 1008 HARDEN STREET
COLUMBIA, NC 29201

POLE TAG ID# N/A

POLE TYPE: **REPLACEMENT SCE&G 28' FIBERGLASS POLE**

PROPERTY INFORMATION

SITE COORDINATES:
34.003951°
−81.018019°

JURISDICTION: SCDOT

COUNTY: RICHLAND

DESIGN CRITERIA:

1. 2012 INTERNATIONAL BUILDING CODE (IBC) WITH SC STATE AMENDMENT.
   WIND LOADS PER ASCE 7-10.
   A. ULTIMATE WIND SPEED (3-SECOND GUST):130 mph
   B. RISK CATEGORY: II
   C. WIND EXPOSURE: C
   D. TOPOGRAPHIC CATEGORY: I
2. DEAD LOAD
   A. EQUIPMENT WEIGHT PER MANUFACTURER DATA.
3. SEISMIC LOAD DOES NOT GOVERN THIS DESIGN.

PROJECT TEAM

PROJECT MANAGEMENT FIRM: CROWN CASTLE
ADDRESS: 100 REGENCY FOREST DRIVE
SUITE 150
CARY, NC 27518

ENGINEERING FIRM: AW SOLUTIONS
ADDRESS: 300 CROWN OAK CENTRE DR.
LONGWOOD, FL 32750

CONTACT: SHANE HAFNER
PHONE: 407.260.0231 EXT. 120

DRAWING INDEX

SHEET	SHEET DESCRIPTION	REV
T1	TITLE SHEET	1
C1	SITE PLAN	1
C2	ELEVATION	1
C3	DETAILS	1
C4	DETAILS	1
SP1	SPECIFICATIONS	1
SP2	SPECIFICATIONS	1

CROWN CASTLE

AW Solutions
an intercloud systems company
MindsTogether.
300 CROWN OAK CENTRE DRIVE, LONGWOOD, FL 32750
TEL: 407.260.0231
FL COA#: 26983

DRAWN BY:	BT	CHECKED BY:	EW

REV	DATE	DESCRIPTION
1	10/09/15	REVISED LOCATION/EQUIPMENT
0	02/19/15	ISSUED FOR PERMIT

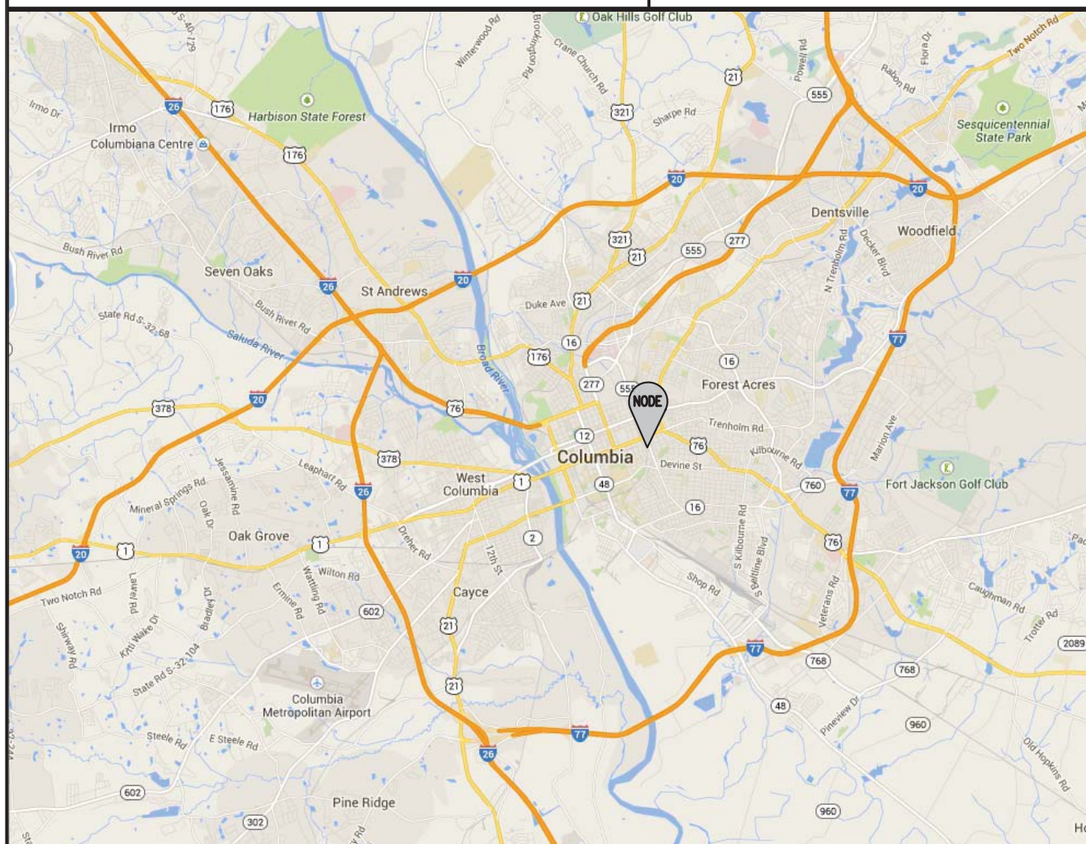

GENERAL VICINITY MAP

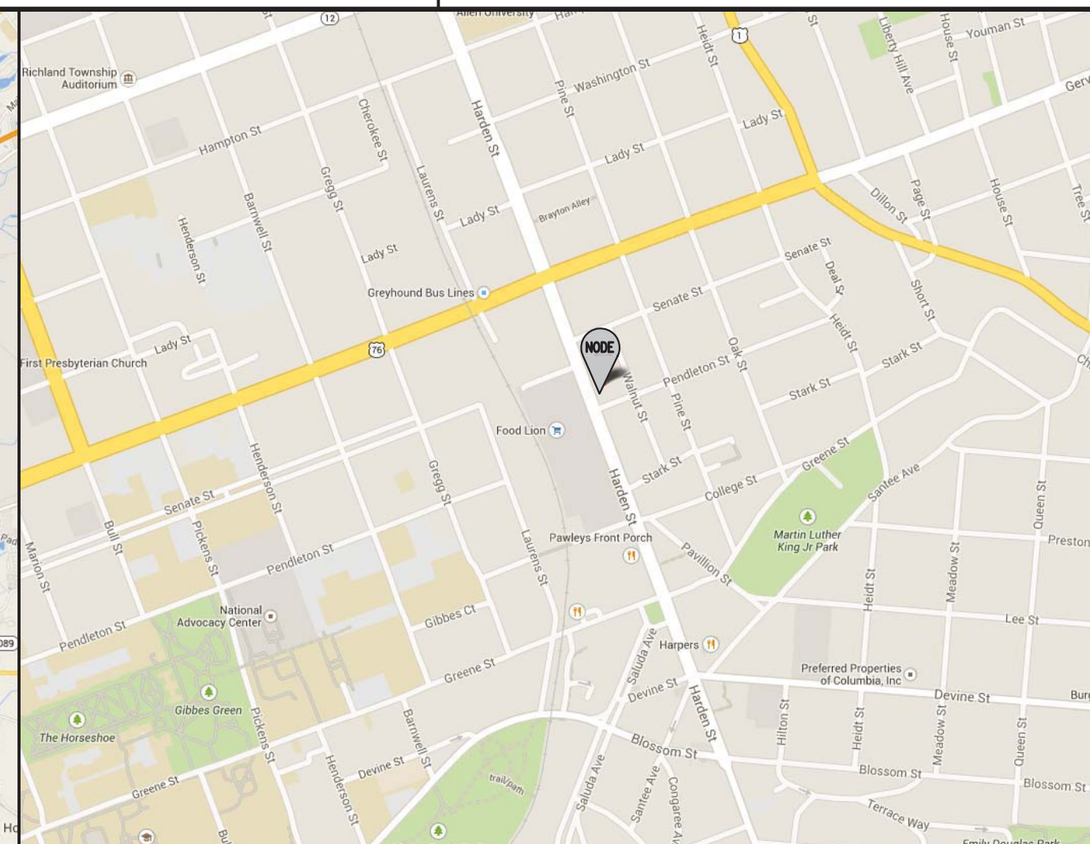

SPECIFIC LOCATION MAP

UNDERGROUND SERVICE ALERT
CALL TOLL FREE
1-888-721-7877
48 HOURS BEFORE YOU DIG

EMMANUEL POULIN
SC. P.E. #21093

IT IS A VIOLATION OF LAW FOR ANY PERSON UNLESS THEY ARE ACTING UNDER THE DIRECTION OF A LICENSED PROFESSIONAL ENGINEER TO ALTER THIS DOCUMENT. UNLESS EXPLICITLY AGREED TO BY AW SOLUTIONS IN WRITING, AW SOLUTIONS DISCLAIMS ALL LIABILITY ASSOCIATED WITH THE REUSE, ALTERATION OR MODIFICATION OF THE CONTENTS HEREIN.

NODE ID#: **FPSC-001m2-A**

POLYGON ID#: **FIVE POINTS COLUMBIA**

SHEET TITLE:

TITLE SHEET

SHEET NUMBER:

T1

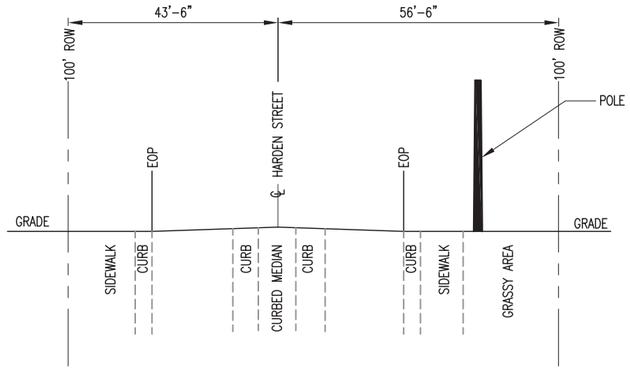

1 **TYPICAL PROFILE VIEW**
SCALE: NTS

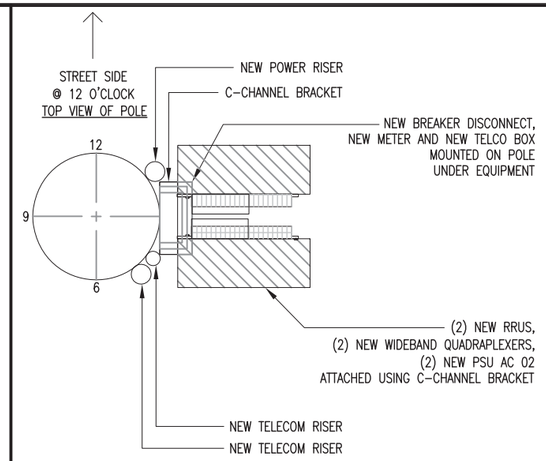

2 **QUADRANT LOCATION OF PROPOSED EQUIPMENT**
SCALE: NTS

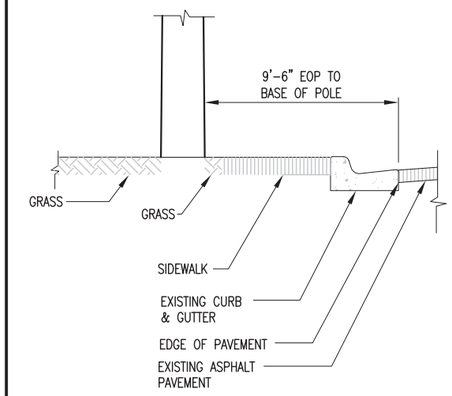

3 **CURB ELEVATION**
SCALE: NTS

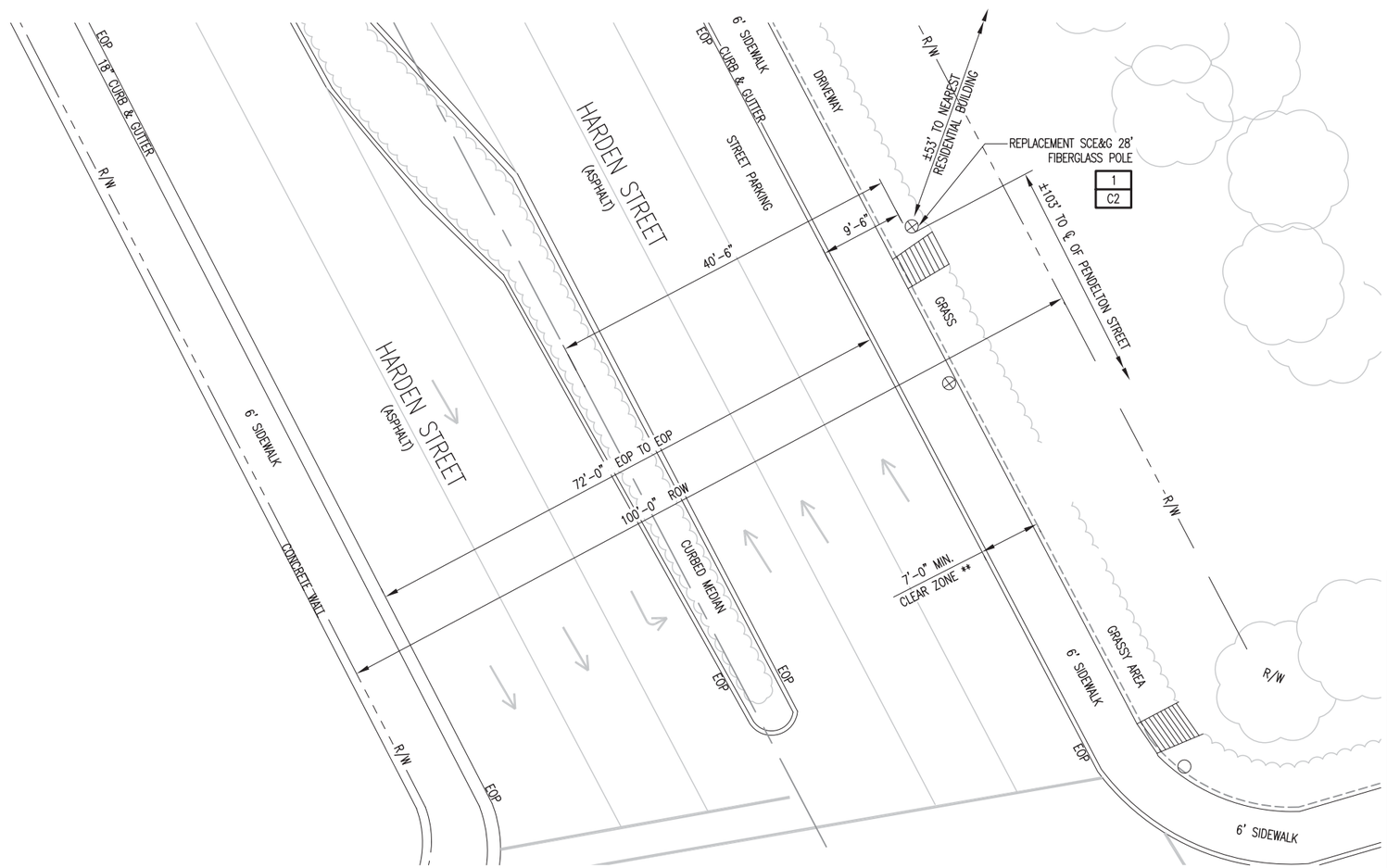

4 **PLAN VIEW**
SCALE: NTS

** MINIMUM CLEAR ZONES ILLUSTRATED USING CURRENT SCDOT UAM COMPLETE STREETS PLANNING AND DESIGN GUIDELINES

POSTED SPEED LIMIT:
30 MPH

UNDERGROUND SERVICE ALERT
CALL TOLL FREE 1-888-721-7877
48 HOURS BEFORE YOU DIG

NOTES:
1. CONTRACTOR SHALL MAINTAIN UNINTERRUPTED ACCESS TO ALL DRIVEWAYS, SIDE STREETS AND WALKWAYS AT ALL TIMES UNLESS OTHERWISE PERMITTED.
2. CONTRACTOR SHALL PREPARE A MAINTENANCE OF TRAFFIC (M.O.T.) PLAN FOR PEDESTRIAN TRAFFIC AND WORK WITHIN THE RIGHT-OF-WAY, INCLUDING VEHICLE PARKING AND EQUIPMENT STAGING.
3. CONTRACTOR SHALL RESTORE ANY DISTURBED AREAS TO ORIGINAL CONDITION OR BETTER.

SYMBOL LEGEND

- E — POWER CONDUIT
- T — TELCO CONDUIT
- PROPOSED FIBER CONDUIT
- OHE — OVERHEAD CONDUCTORS
- G — GROUNDING
- X — FENCE
- WTR — WATER
- S — SEWER
- CENTERLINE OF ROAD
- ST — STORM
- MH — MANHOLE
- HYDRANT
- EXISTING UTILITY POLE
- PROPOSED WOOD UTILITY POLE
- PROPOSED METAL UTILITY POLE
- PROPOSED CONCRETE UTILITY POLE
- 1 / C7 — REPRESENTS DETAIL # / REPRESENTS SHEET#
- NOTE 1 / SHT E7 — REPRESENTS NOTE / REPRESENTS SHEET#

CROWN CASTLE

AW Solutions
an intercloud systems company
MindsTogether.
300 CROWN OAK CENTRE DRIVE, LONGWOOD, FL 32750
TEL: 407.260.0231
FL COA#: 26983

DRAWN BY:	BT	CHECKED BY:	EW

REV	DATE	DESCRIPTION
1	10/09/15	REVISED LOCATION/EQUIPMENT
0	02/19/15	ISSUED FOR PERMIT

EMMANUEL POULIN
SC. P.E. #21093

IT IS A VIOLATION OF LAW FOR ANY PERSON UNLESS THEY ARE ACTING UNDER THE DIRECTION OF A LICENSED PROFESSIONAL ENGINEER TO ALTER THIS DOCUMENT. UNLESS EXPLICITLY AGREED TO BY AW SOLUTIONS IN WRITING, AW SOLUTIONS DISCLAIMS ALL LIABILITY ASSOCIATED WITH THE REUSE, ALTERATION OR MODIFICATION OF THE CONTENTS HEREIN.

NODE ID#: **FPSC-001m2-A**

POLYGON ID#: **FIVE POINTS COLUMBIA**

SHEET TITLE:
SITE PLAN

SHEET NUMBER:
C1

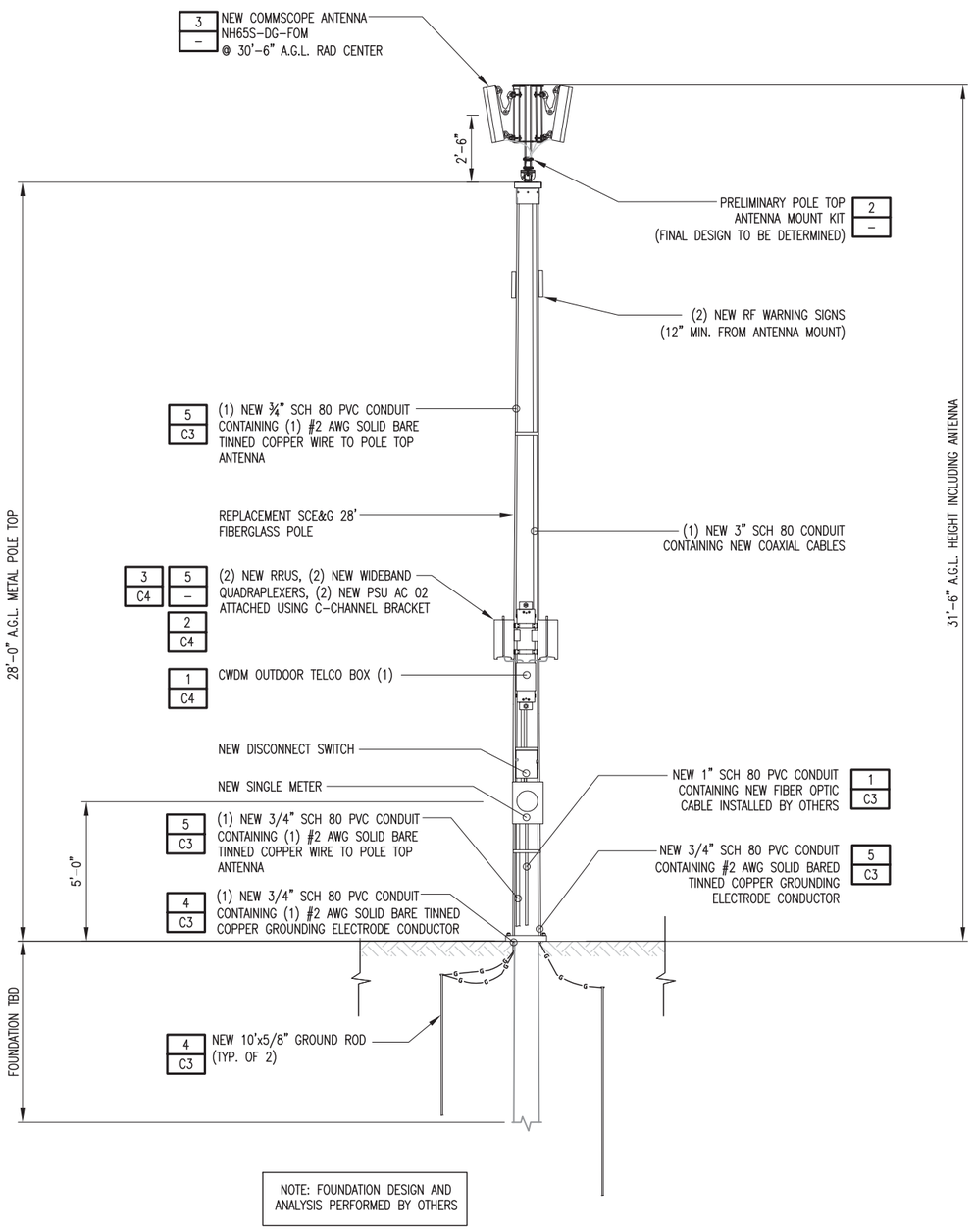

1 **ELEVATION**
SCALE: NTS

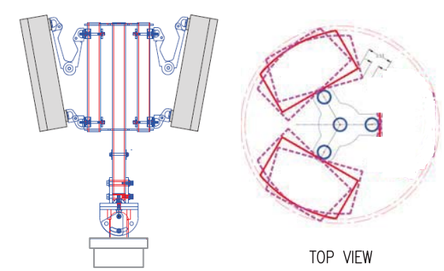

2 **PRELIMINARY ANTENNA MOUNTING KIT – FINAL DESIGN TBD**
SCALE: NTS

Product Specifications

COMMSCOPE

NH65S-DG-FOM

Andrew® Dualband 65° Flat Panel Metro Cell Antenna, 698-896 and 1710-2170 MHz with fixed tilt in the low band and manual tilt in the high band. Contains internal diplexer and active GPS L1 band antenna.

NH65S-DG-FOM

Color	Light gray
GPS Connector Interface	4.1-9.5 DIN Female
GPS Connector Quantity	1
Lightning Protection	dc Ground
Radiator Material	Aluminum | Low loss circuit board
Radome Material	Fiberglass, UV resistant
RF Connector Interface	7-16 DIN Female
RF Connector Location	Bottom
RF Connector Quantity, total	2
Wind Loading, maximum	224.0 N @ 150 km/h 50.4 lbf @ 150 km/h
Wind Speed, maximum	241 km/h | 150 mph

Dimensions

Depth	181.0 mm | 7.1 in
Length	728.0 mm | 28.7 in
Width	301.0 mm | 11.9 in
Net Weight	7.6 kg | 16.8 lb

3 **ANTENNA SPECIFICATIONS COMMSCOPE NH65 S-DG-FOM**
SCALE: NTS

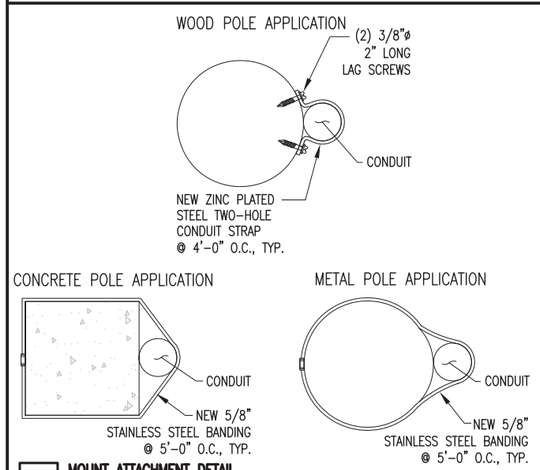

4 **MOUNT ATTACHMENT DETAIL**
SCALE: 1" = 1'-0"

Microlab

The BK-96 Quadraplexer has been designed using passive, proprietary techniques to ensure minimal loss and very high reliability. It allows efficient combining or division of the standard cellular bands for use in a base station, coaxial distributed in-building cellular network or DAS. (03/14)

Frequency Bands:		
Input 1:	LTE-700 Bands:	698 - 806 MHz
Input 2:	GSM-850 band:	824 - 896 MHz
Input 3:	PCS 1900 Band:	1850 - 2000MHz
Input 4:	AWS band (N/Tx):	1710 - 1755 and 2110 - 2170 MHz
Return Loss:	>18 dB, all ports	
Isolation:	>50 dB	
Insertion Loss:	<0.5 dB all paths	
Passband Ripple:	<0.5 dB typical	
Input Power:	250W/input max.	
Impedance:	50Ω nominal	
Intermod. (PIM):	<-153 dBc, <-156 dBc typical (2 tones of 20W, at downlink bands)	
DC/A.RG:		
Connection:	Factory Configurable at time of order	
Max. Current:	2A continuous; 4A peak	
Max Voltage:	±32V	
DDK Insertion Loss:	<0.8 dB at 2170 MHz	
DDK Return Loss:	>12 dB	
Environment:	-33° - +55°C, IP67 (ETSI EN 300 019 class 4.1)	
Lightening Protection:	±5 kA, 8/20μs	
Altitude:	2000 m max. (+6500 ft.)	
MTBF:	>500,000 hours	
EMC:	ETS 300 342-3	

Order Options:	Model No.	DC Pass to:
Standard Unit:	BK-960	All ports
Specials to order:	BK-9601	None
	BK-9602	AWS only
	BK-9603	PCS only
	BK-9604	GSM-850 only
	BK-9605	LTE-700 only
	BK-9606	All except AWS
	BK-9607	All except PCS
	BK-9608	All except GSM-850
	BK-9609	All except LTE-700

All other combinations with special part number

Housing:	Powder Coating
Connectors:	DIN 7/16 (7) Long Neck
Bracket:	Stainless steel 304
Mounting:	Polarwall bracket option with 2 metal clamps for poles (45 mm)
Protection Ground:	M6 screw (SS 304)
Weight, net:	5.2 lbs (2.7 kg) Single unit 10.2 lbs (4.6 kg) Single & bracket 14.4 lbs (6.6 kg) Dual & bracket

Wideband Quadraplexer, BK-96

For combining LTE-700/GSM-850/PCS/AWS 698-806/824-894/1850-2000/AWS
Rev. A

5 **WIDEBAND QUADRAPLEXER**
SCALE: NTS

CROWN CASTLE

AW Solutions
an intercloud systems company
MindsTogether.
300 CROWN OAK CENTRE DRIVE, LONGWOOD, FL 32750
TEL: 407.260.0231
FL COA#: 26983

DRAWN BY:	BT	CHECKED BY:	EW

REV	DATE	DESCRIPTION
1	10/09/15	REVISED LOCATION/EQUIPMENT
0	02/19/15	ISSUED FOR PERMIT

EMMANUEL POULIN
SC. P.E. #21093

IT IS A VIOLATION OF LAW FOR ANY PERSON UNLESS THEY ARE ACTING UNDER THE DIRECTION OF A LICENSED PROFESSIONAL ENGINEER TO ALTER THIS DOCUMENT. UNLESS EXPLICITLY AGREED TO BY AW SOLUTIONS IN WRITING, AW SOLUTIONS DISCLAIMS ALL LIABILITY ASSOCIATED WITH THE REUSE, ALTERATION OR MODIFICATION OF THE CONTENTS HEREIN.

NODE ID#: **FPSC-001m2-A**

POLYGON ID#: **FIVE POINTS COLUMBIA**

SHEET TITLE:

ELEVATION

SHEET NUMBER:

C2

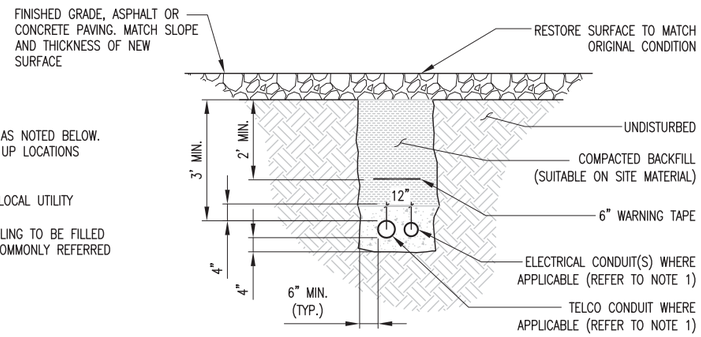

1. PROVIDE PVC CONDUIT BELOW GRADE EXCEPT AS NOTED BELOW.
2. PROVIDE RGS CONDUIT AND ELBOWS AT STUB UP LOCATIONS (i.e. SERVICE POLE, BTS EQUIPMENT, ETC.).
3. INSTALL UTILITY PULLBOXES PER NEC.
4. SEPARATION DIMENSION TO BE VERIFIED WITH LOCAL UTILITY CO. REQUIREMENTS.
5. CONDUIT/TUBING CONTAINING FIBER OPTIC CABLING TO BE FILLED WITH GEL TO PREVENT WATER PENETRATION, COMMONLY REFERRED TO AS "ICKY PICK."

1 **UNDERGROUND CONDUIT(S) TRENCHING DETAIL (IF APPLICABLE)**

SCALE: NTS

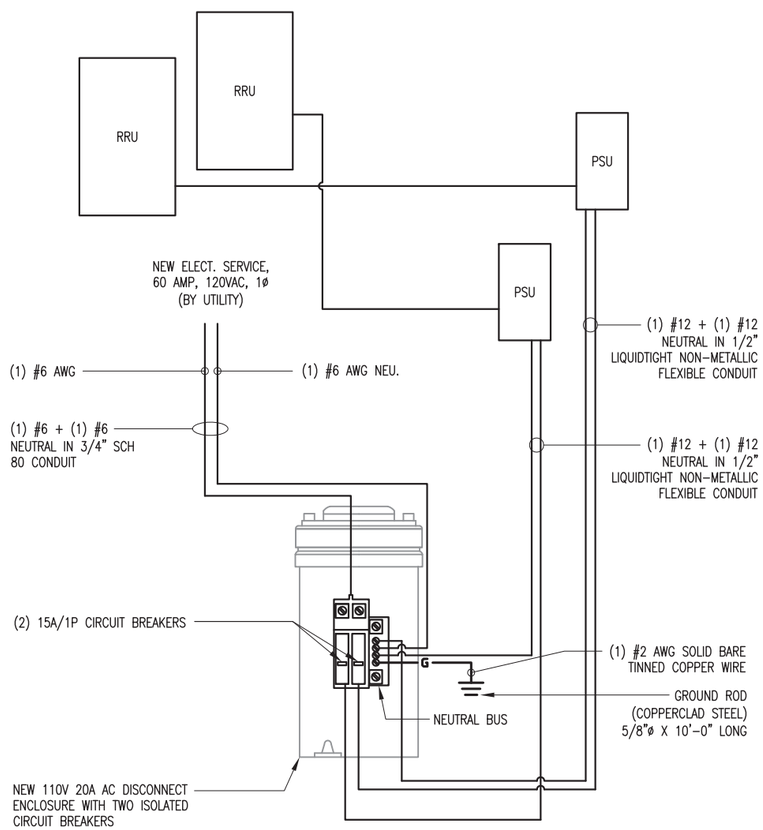

1. SHORT CIRCUIT CURRENT RATING OF FUSIBLE MAIN DISCONNECT: 100kA.
2. FEEDER CONDUCTORS ARE SIZED FOR A MAXIMUM VOLTAGE DROP OF 2% AT DESIGN LOAD OF 30A.
3. BRANCH CIRCUIT CONDUCTORS ARE SIZED FOR A MAXIMUM VOLTAGE DROP OF 3% AT DESIGN LOAD. HOWEVER, THIS DESIGN CONTAINS NO BRANCH CIRCUITS.
4. ALL CONDUCTORS ARE TO BE COPPER WIRE WITH INSULATION TYPE XHHW.
5. ALL ABOVE GRADE CONDUITS ARE TO BE UV RESISTANT SCHEDULE 80 PVC. ALL BELOW GRADE CONDUITS ARE TO BE SCHEDULE 40 PVC.

2 **ELECTRICAL AND FIBER WIRING DIAGRAMS**

SCALE: NTS

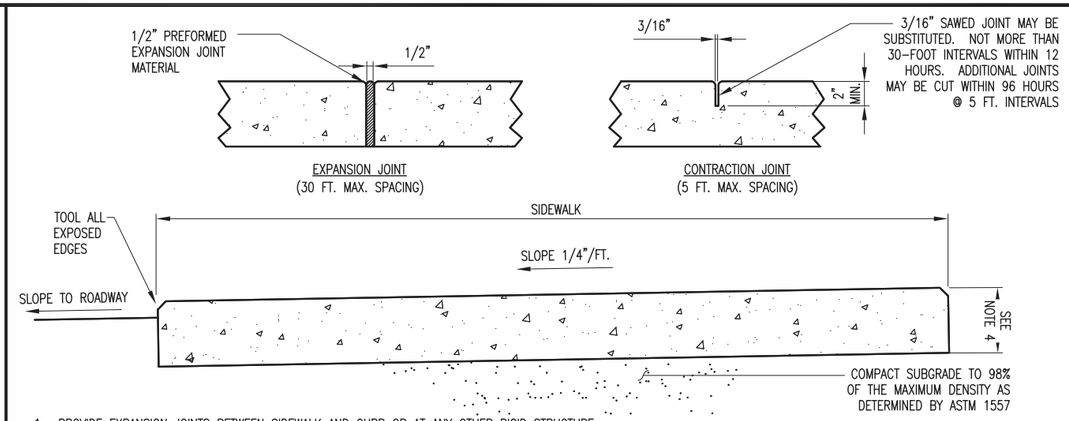

1. PROVIDE EXPANSION JOINTS BETWEEN SIDEWALK AND CURB OR AT ANY OTHER RIGID STRUCTURE.
2. EXPANSION JOINTS SHALL BE PROVIDED AT 30 FT. MAXIMUM SPACING.
3. ULTIMATE COMPRESSIVE STRENGTH OF CONCRETE SHALL BE 2,500 P.S.I. @28 DAYS FOR SIDEWALKS
4. MINIMUM THICKNESS OF SIDEWALK SHALL BE 4 INCHES. CONCRETE DRIVEWAYS SHALL BE 6 INCHES THICK MINIMUM AND SHALL BE REINFORCED WITH 6X6 W1.4 X W1.4 WELDED WIRE MESH, PLACED 3 INCHES CLEAR FROM BOTTOM.
5. FOR SIDEWALKS OR DRIVEWAYS WITH R.O.W., COMPACT SUB-GRADE TO 98% OF MAXIMUM DENSITY AS DETERMINED BY ASTM1557. COMPACTION OUTSIDE R.O.W. MAY BE 95% OF MAXIMUM DENSITY.

3 **CONCRETE SIDEWALK (IF APPLICABLE)**

SCALE: NOT APPLICABLE

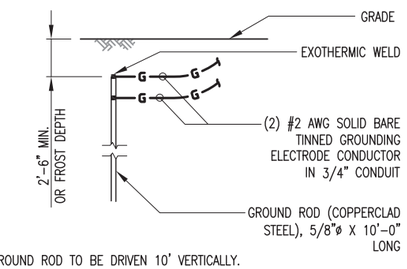

1. GROUND ROD TO BE DRIVEN 10' VERTICALLY.

4 **GROUND ROD DETAIL**

SCALE: NTS

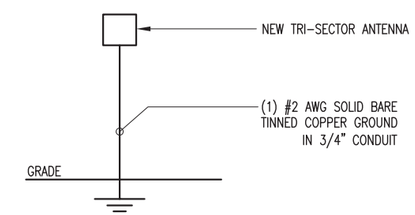

5 **ANTENNA GROUNDING SCHEMATIC**

SCALE: NTS

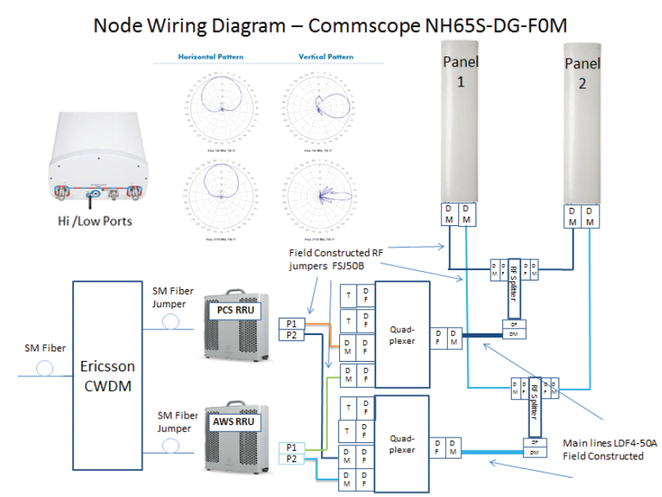

6 **FIBER WIRING DIAGRAM**

SCALE: NTS

CROWN CASTLE

AW Solutions
an intercloud systems company
MindsTogether.

300 CROWN OAK CENTRE DRIVE, LONGWOOD, FL 32750
TEL: 407.260.0231
FL COA#: 26983

DRAWN BY:	BT	CHECKED BY: EW

REV	DATE	DESCRIPTION
1	10/09/15	REVISED LOCATION/EQUIPMENT
0	02/19/15	ISSUED FOR PERMIT

EMMANUEL POULIN
SC. P.E. #21093

IT IS A VIOLATION OF LAW FOR ANY PERSON UNLESS THEY ARE ACTING UNDER THE DIRECTION OF A LICENSED PROFESSIONAL ENGINEER TO ALTER THIS DOCUMENT. UNLESS EXPLICITLY AGREED TO BY AW SOLUTIONS IN WRITING, AW SOLUTIONS DISCLAIMS ALL LIABILITY ASSOCIATED WITH THE REUSE, ALTERATION OR MODIFICATION OF THE CONTENTS HEREIN.

NODE ID#: **FPSC-001m2-A**

POLYGON ID#: **FIVE POINTS COLUMBIA**

SHEET TITLE:

DETAILS

SHEET NUMBER:

C3

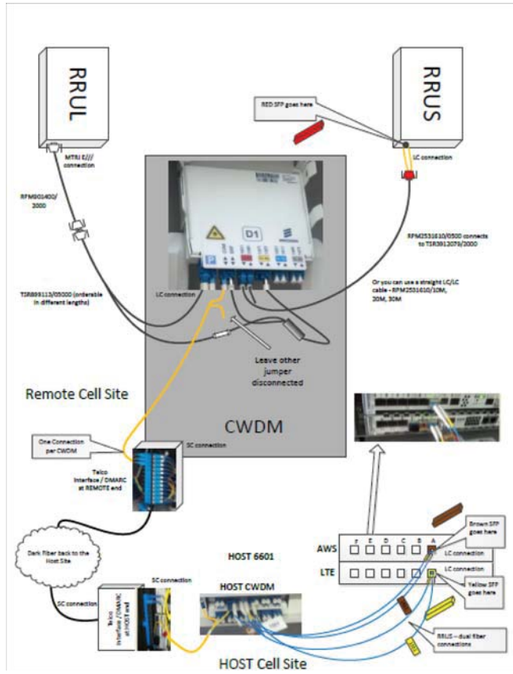

1 **EQUIPMENT (CWDM TELCO BOX)**
SCALE: NTS

PSU AC (Optional)

The PSU (also called the PSU AC) uses an AC power interface available from Ericsson. The AC cable is connected to the PSU with a contact on the cable. The AC connector comes with the RRUS.

All cables must be shielded. The shielding must be grounded on both the PSU and the power supply equipment side with the site Main Earth Terminal (MET). Each power cable conductor can have a 1.5–4 mm² cross-sectional area.

The PSU is required for the AC power input option. The PSU converts RRUS input main power 100 - 250 V AC to -48 V DC and is installed on the back of the RRUS. Figure 8 shows the PSU.

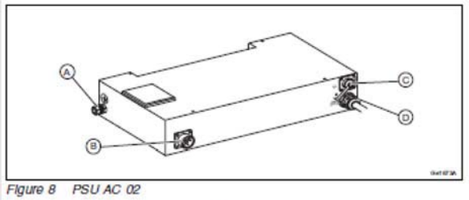

Figure 8 PSU AC 02

Table 12 PSU AC 02 Connection Interfaces

Position	Interface
A	Grounding interface
B	AC power interface
C	Interface for future use
D	DC power interface

Table 1 PSU Technical Data

Technical Data		PSU AC 01	PSU AC 02	PSU AC 03	PSU 24 01	PSU 48 02
Dimensions	Height	43 mm	68 mm	43 mm	43 mm	68 mm
	Width	145 mm	330 mm	145 mm	145 mm	330 mm
	Depth	225 mm	179 mm	225 mm	225 mm	179 mm
	Weight	< 2.2 kg	5.2 kg	< 2.3 kg	< 2.2 kg	5.2 kg

(1) The cabinet's external AC power fusing must meet the characteristic fuse, type gL-gG-gD in accordance with IEC/EN 60 269-1 and UL 248-8 and characteristic circuit breaker in accordance with IEC 60 947-2 and UL 489.
(2) The cabinet's external DC power fusing must meet the characteristic fuse, type gL-gG-gD in accordance with IEC/EN 60 269-1 and UL 248-8 and characteristic circuit breaker in accordance with IEC 60 947-2 and UL 489A.
(3) Selectable by switch

2 **EQUIPMENT (PSU AC)**
SCALE: NTS

Technical Data

- 2Tx/2Rx
- Supports all defined 3GPP modulations and MIMO modes
- 2 x 30 W RF output power
- H x W x D: 17.1" x 10.0" x 7.6" w/o sunshield
- Weight: 38.6lbs (without sunshield)
- -40 F to +131 F
- -48V DC
- Recommended fuse size: 20 A
- Max Heat Dissipation: 302 W
- Typical power consumption: 230 W
- Silent Operation, no fans, single man install
- CPRI v4.0, SM Fiber

Dimensions, Weights & Mechanicals

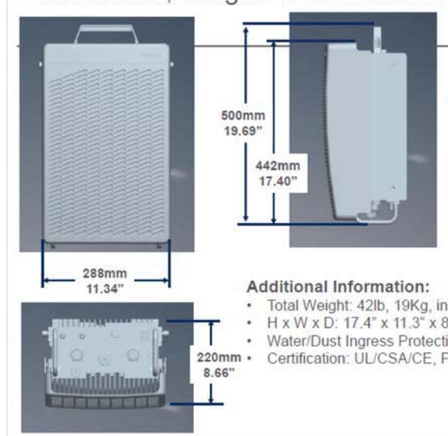

Mounting Clearances
- Top: 1.5'-3'
- Sides: 4"-12"
- Bottom: 1'
- Front: 2'-4'

Additional Information:
- Total Weight: 42lb, 19Kg, including sunshield
- H x W x D: 17.4" x 11.3" x 8.7" with sunshield
- Water/Dust Ingress Protection: IP55
- Certification: UL/CSA/CE, FCC/CISPR, TS36.113, RoHS5/6

Physical Interface

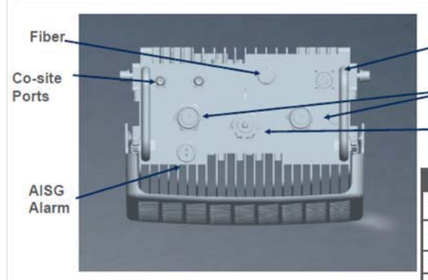

Power	Circular connector with two #12 contacts Amphenol AL00FD13-71P
Fiber	Circular MPO 4 fiber Receptacle Amphenol 955-220-5001
RF	7/16 DIN female connectors
Craft	Industrial Ethernet RJ45 Connector (IP67) Conec 17-10040
AISG	8 pin Circular DIN Lumberg 036297 housing
Co-siting Ports	QN bulkhead mount Huber+Suhner 24 QN-50-2-3
Ground	1 Hole Compression Lug, M8 stud

3 **EQUIPMENT**
SCALE: NTS

CROWN CASTLE

AW Solutions
an intercloud systems company
MindsTogether.
300 CROWN OAK CENTRE DRIVE, LONGWOOD, FL 32750
TEL: 407.260.0231
FL COA#: 26983

DRAWN BY:	BT	CHECKED BY:	EW

REV	DATE	DESCRIPTION
1	10/09/15	REVISED LOCATION/EQUIPMENT
0	02/19/15	ISSUED FOR PERMIT

EMMANUEL POULIN
SC. P.E. #21093

IT IS A VIOLATION OF LAW FOR ANY PERSON UNLESS THEY ARE ACTING UNDER THE DIRECTION OF A LICENSED PROFESSIONAL ENGINEER TO ALTER THIS DOCUMENT. UNLESS EXPLICITLY AGREED TO BY AW SOLUTIONS IN WRITING, AW SOLUTIONS DISCLAIMS ALL LIABILITY ASSOCIATED WITH THE REUSE, ALTERATION OR MODIFICATION OF THE CONTENTS HEREIN.

NODE ID#: **FPSC-001m2-A**

POLYGON ID#: **FIVE POINTS COLUMBIA**

SHEET TITLE:
DETAILS

SHEET NUMBER:
C4

1 – GENERAL PROVISIONS

1.1 – CONTRACT OVERVIEW

1. THE INTENTION OF THE DOCUMENTS IS TO SHOW THE COMPLETE INSTALLATION AND TO INCLUDE ALL LABOR AND MATERIALS REASONABLY NECESSARY, WHETHER OR NOT SPECIFICALLY INDICATED, FOR THE PROPER EXECUTION AND COMPLETION OF THE WORK AS STIPULATED IN THE CONTRACT. THE INTENT OF THIS DOCUMENT IS NOT TO DESIGNATE THE MEANS AND METHODS OF PROCEDURE OF THE WORK. THE CONTRACTOR SHALL SUPERVISE AND COORDINATE ALL WORK, USING HIS PROFESSIONAL KNOWLEDGE AND SKILLS. HE IS SOLELY RESPONSIBLE FOR ALL CONSTRUCTION MEANS, METHODS, TECHNIQUES, PROCEDURES, SEQUENCING AND COORDINATING ALL PORTIONS OF THE WORK UNDER THE CONTRACT.
2. ALL WORK SHALL BE PERFORMED IN ACCORDANCE WITH THE LATEST EDITION OF THE FOLLOWING CODES, STANDARDS AND SUPPLEMENTS:
    - IBC – INTERNATIONAL BUILDING CODE 2012 WITH SC STATE AMENDMENT.
    - AISC – AMERICAN INSTITUTE OF STEEL CONSTRUCTION SPECIFICATIONS
    - IEEE – INSTITUTE OF ELECTRICAL AND ELECTRONICS ENGINEERS
    - NEC – NATIONAL ELECTRICAL CODE
    - NEMA – NATIONAL ELECTRICAL MANUFACTURERS ASSOCIATION
    - UL – UNDERWRITERS LABORATORIES
    - NSPC – NATIONAL STANDARD PLUMBING CODE
    - IMC – INTERNATIONAL MECHANICAL CODE
    - NFPA – NATIONAL FIRE PROTECTION ASSOCIATION
    - OSHA – OCCUPATIONAL SAFETY AND HEALTH ADMINISTRATION
    - ANSI/TIA – TELECOMMUNICATIONS INDUSTRY ASSOCIATION – 222-G STANDARD
    - ALL GOVERNING STATE, COUNTY AND LOCAL CODES AND ORDINANCES

    THE MOST STRINGENT CODE WILL APPLY IN THE CASE OF DISCREPANCIES OR DIFFERENCES IN THE CODE REQUIREMENTS.
3. THE ENGINEERING DRAWINGS SHOW PRINCIPAL AREAS WHERE WORK MUST BE ACCOMPLISHED UNDER THIS CONTRACT. INCIDENTAL WORK MAY ALSO BE NECESSARY IN AREAS NOT SHOWN ON THE ENGINEERING DRAWINGS DUE TO CHANGES AFFECTING EXISTING ELECTRICAL OR OTHER SYSTEMS. SUCH INCIDENTAL WORK IS ALSO A PART OF THIS CONTRACT. INSPECT THOSE AREAS AND ASCERTAIN WHAT IS NEEDED TO DO THAT WORK IN ACCORDANCE WITH THE CONTRACT REQUIREMENTS AT NO ADDITIONAL COST TO THE OWNER.
4. DO NOT SCALE DRAWINGS. ALL DIMENSIONS TAKE PRECEDENCE OVER SCALE.
5. MINOR DEVIATIONS FROM THE DESIGN LAYOUT ARE ANTICIPATED AND SHALL BE CONSIDERED AS PART OF THE WORK HOWEVER, NO CHANGE THAT ALTER THE CHARACTER INTENT OF THE DESIGN WILL BE MADE OR PERMITTED BY THE OWNER WITHOUT A CHANGE ORDER.
6. GENERAL CIVIL, STRUCTURAL, ELECTRICAL AND ANTENNA DRAWINGS ARE INTERRELATED. IN PERFORMANCE OF THE WORK, EACH CONTRACTOR MUST REFER TO ALL DRAWINGS. ALL COORDINATION SHALL BE THE RESPONSIBILITY OF THE GENERAL CONTRACTOR.
7. THE GENERAL NOTES CONTAINED HEREIN ARE PART OF THE PLANS AND SPECIFICATIONS, AND ARE TO BE COMPLIED WITH IN ALL RESPECTS. THE MOST RESTRICTIVE NOTES SPECIFIED ARE TO TAKE PRECEDENCE. CERTAIN SECTIONS OF THE GENERAL NOTES MAY NOT APPLY TO EVERY SITE. THE CONTRACTOR IS TO COMPLY WITH ALL APPLICABLE GENERAL NOTES IN ALL RESPECTS.
8. ALL GENERAL NOTES AND STANDARD DETAILS ARE THE MINIMUM REQUIREMENT TO BE USED IN CONDITIONS WHICH ARE NOT SPECIFICALLY SHOWN OTHERWISE.
9. REPRESENTATION OF TRUE NORTH OTHER THAN THOSE FOUND ON THE PLOT OF THE SURVEY DRAWING SHALL NOT BE USED TO IDENTIFY OR ESTABLISH THE BEARING OF THE TRUE NORTH AT THE SITE. THE CONTRACTOR SHALL RELY SOLELY ON THE PLOT OF THE SURVEY DRAWING AND ANY SURVEYOR'S MARKING AT THE SITE FOR THE ESTABLISHMENT OF THE TRUE NORTH, AND SHALL NOTIFY THE ENGINEER PRIOR TO PROCEEDING WITH THE WORK IF ANY DISCREPANCY IS FOUND BETWEEN THE VARIOUS ELEMENTS OF THE WORKING DRAWINGS AND THE TRUE NORTH ORIENTATION AS DEPICTED ON THE CIVIL SURVEY. THE CONTRACTOR SHALL ASSUME SOLE LIABILITY FOR ANY FAILURE TO NOTIFY THE ENGINEER.
10. THE CONTRACTOR SHALL USE ADEQUATE NUMBERS OF SKILLED WORKMEN WHO ARE THOROUGHLY TRAINED AND EXPERIENCED IN THE NECESSARY CRAFTS, AND WHO ARE COMPLETELY FAMILIAR WITH THE SPECIFIED REQUIREMENTS AND METHODS NEEDED FOR PROPER PERFORMANCE OF THE WORK.
11. THE CONTRACTOR WILL BE REQUIRED TO ASSUME SOLE AND COMPLETE RESPONSIBILITY FOR JOB SITE CONDITIONS DURING THE COURSE OF CONSTRUCTION OF THE PROJECT, INCLUDING SAFETY OF ALL PERSONS AND PROPERTY, THAT THIS REQUIREMENT SHALL BE MADE TO APPLY CONTINUOUSLY AND NOT BE LIMITED TO NORMAL WORKING HOURS. THE CONTRACTOR FURTHER AGREES TO INDEMNIFY AND HOLD THE DESIGN ENGINEER HARMLESS FROM ANY AND ALL LIABILITY, REAL OR ALLEGED, IN CONNECTION WITH THE PERFORMANCE OF WORK ON THIS PROJECT.
12. THE CONTRACTOR SHALL BE RESPONSIBLE FOR COMPLYING WITH ALL SAFETY PRECAUTIONS AND REGULATIONS SUCH AS OSHA COMPLIANCE DURING THE PROGRESS OF THE WORK. THE ENGINEER WILL NOT ADVISE NOR PROVIDE DIRECTION AS TO SAFETY PRECAUTIONS AND PROGRAMS.
13. THE CONTRACTOR SHALL ASSUME COMPLETE RESPONSIBILITY OF THE SECURITY OF THE SITE UNTIL COMPLETION OF THE CONSTRUCTION.
14. IT IS THE CONTRACTOR'S RESPONSIBILITY TO EXAMINE ALL PLAN SHEETS AND SPECIFICATIONS AND COORDINATE HIS WORK WITH THE WORK OF ALL OTHER CONTRACTORS TO ENSURE THAT WORK PROGRESSION IS NOT INTERRUPTED.
15. THE CONTRACTOR IS INSTRUCTED TO COOPERATE WITH ANY AND ALL OTHER CONTRACTORS PERFORMING WORK ON THIS JOB SITE DURING THE PERFORMANCE OF THIS CONTRACT TO AVOID DELAYS IN THE CONTRACT SCHEDULE OR OTHER WORK PERFORMED IN THE VICINITY OF THE CONSTRUCTION AREA.
16. THE CONTRACTOR SHALL SUBMIT A CONSTRUCTION SCHEDULE TO THE PROPERTY OWNER WELL IN ADVANCE OF THE STARTING DATE OF THE WORK. THE OWNER SHALL ALSO BE NOTIFIED OF A CHANGE IN THE CONSTRUCTION SCHEDULE.
17. THE CONTRACTOR SHALL COMPLY WITH ALL REQUIRED PERMITS.
18. EACH CONTRACTOR IS RESPONSIBLE FOR PULLING THE BUILDING PERMIT AT THE LOCAL JURISDICTION AS THE CONTRACTOR OF RECORD, AND SHALL PROVIDE THE JURISDICTION WITH ALL PROOF REQUIRED TO OPERATE AS THE CONTRACTOR IN THIS JURISDICTION. THE CONTRACTOR SHALL BE RESPONSIBLE FOR OBTAINING, AND INCURRING THE COST OF ALL REQUIRED PERMITS, INSPECTIONS, CERTIFICATIONS, ETC. PRIOR TO BEGIN THE WORK.
19. THE CONTRACTOR IS RESPONSIBLE FOR PROVIDING AMPLE NOTICE TO THE BUILDING INSPECTION DEPARTMENT TO SCHEDULE THE REQUIRED INSPECTIONS. A MINIMUM OF 48 HOURS OF NOTICE SHOULD BE GIVEN TO AUTHORITIES. AN EXTENSION IN THE CONTRACT SCHEDULE WILL NOT BE GRANTED DUE TO DELAY CAUSED BY INSPECTIONS.
20. EACH CONTRACTOR IS RESPONSIBLE FOR APPLICATION AND PAYMENT OF CONTRACTOR LICENSES, BONDS AND INSURANCES. DOCUMENTATION SHALL BE PROVIDED TO THE OWNER PRIOR TO THE WORK.
21. A COPY OF THE APPROVED PLANS SHALL BE KEPT IN A PLACE SPECIFIED BY THE GOVERNING AGENCY, AND BY LAW SHALL BE AVAILABLE FOR INSPECTION AT ALL TIMES. IT IS THE CONTRACTOR RESPONSIBILITY TO ENSURE ALL CONSTRUCTION SETS REFLECT THE SAME INFORMATION AS THE APPROVED PLANS. THE CONTRACTOR SHALL ALSO MAINTAIN ONE SET OF PLANS AT THE SITE FOR THE PURPOSE OF DOCUMENTING ALL AS-BUILTS CHANGES, REVISIONS, ADDENDA, OR CHANGES ORDERS.
22. THE CONTRACTOR IS TO PROVIDE THE OWNER WITH A FULL SET OF RECORD DRAWINGS WITH ACTUAL DIMENSIONS, ROUTING AND CIRCUITS UPON COMPLETION OF CONSTRUCTION.
23. THE CONTRACTOR IS TO CONTACT BOTH LOCAL POWER AND TELEPHONE UTILITY COMPANIES BEFORE CONSTRUCTION BEGINS TO ORDER SERVICE, OBTAIN AND PAY ALL FEES ASSOCIATED WITH CONSTRUCTION, SCHEDULE INSTALLATION OF SERVICE, COORDINATE CONDUIT RUN/TERMINATION POINT AND OBTAIN ANY FIELD MATERIALS THAT MAY BE SUPPLIED BY THE UTILITY COMPANIES AND INSTALLED BY THE CONTRACTORS.
24. THE CONTRACTOR SHALL BE RESPONSIBLE FOR ALL TEMPORARY BRACING, SHORING, TIES, FORM WORK AND THE PROTECTION OF ALL WORK DURING CONSTRUCTION TO AVOID DAMAGE, COLLAPSE, DISTORTION, MISALIGNMENT AND ALTERATION OF ROOFING WARRANTIES.
25. THE CONTRACTOR IS RESPONSIBLE TO PROVIDE TEMPORARY POWER, WATER AND TOILET FACILITIES AS REQUIRED BY THE PROPERTY OWNER OR GOVERNING AGENCY.
26. THE CONTRACTOR SHALL MONITOR ALL EXISTING STRUCTURES DURING CONSTRUCTION.
27. THE CONTRACTOR SHALL COORDINATE THE FINAL DIMENSIONS OF ANY TYPE OF BEAM LAYOUT WITH THE FOOTPRINT OF THE NEW EQUIPMENT BEFORE ORDERING ANY MATERIALS.
28. ALL MATERIALS AND EQUIPMENT SHALL BE NEW AND IN SAFE CONDITIONS PRIOR TO INSTALLATIONS, AND SHALL BE OF THE BEST GRADE AND OF THE SAME MANUFACTURER THROUGHOUT FOR EACH CLASS OR GROUP OF EQUIPMENT.
29. ALL MATERIALS MUST BE STORED IN A LEVEL AND DRY LOCATION AND IN A MANNER THAT WILL NOT OBSTRUCT THE FLOW OF OTHER WORK RELATED OR NOT TO THIS CONTRACT. ANY EQUIPMENT OR MATERIAL STORAGE MUST MEET ALL RECOMMENDATIONS OF THE MANUFACTURER. THE CONTRACTOR SHALL INSPECT THOROUGHLY ALL MATERIALS AND EQUIPMENT PRIOR TO FINAL INSTALLATION. DAMAGED EQUIPMENT OR MATERIALS SHALL NOT BE INSTALLED PERMANENTLY.
30. ALL MATERIALS SHALL BE INSTALLED PER THE MANUFACTURERS' INSTRUCTIONS.
31. EXCEPT FOR WARNING SIGNS SUCH AS "NO TRESPASSING" AND SIGNS THAT STATE OWNERSHIP AND EMERGENCY TELEPHONE NUMBERS, NO SIGN SHALL BE LOCATED ON THE TOWER.
32. ALL EQUIPMENT SHALL BE INSTALLED LEVEL AND PLUMB.

1.2 EXISTING CONDITIONS AND STRUCTURES

1. BEFORE BEGINNING WORK AT THE SITE, THE CONTRACTOR SHALL INSPECT THE EXISTING COMPOUND OR BUILDING AND DETERMINE THE EXTENT OF EXISTING FINISHES, SPECIALTIES, EQUIPMENT AND OTHER ITEMS WHICH MUST BE REMOVED AND REINSTALLED IN ORDER TO PERFORM THE WORK UNDER THIS CONTRACT. THE CONTRACTOR MUST VERIFY ALL DIMENSIONS, CONDITIONS AND ELEVATIONS BEFORE STARTING WORK. NO EXTRA CHARGE OR COMPENSATION SHALL BE ALLOWED DUE TO DIFFERENCES BETWEEN ACTUAL DIMENSIONS AND DIMENSIONS INDICATED ON THE CONSTRUCTION DRAWINGS. ALL DISCREPANCIES SHALL BE CALLED TO THE ATTENTION OF THE ENGINEER AND SHALL BE RESOLVED BEFORE PROCEEDING WITH THE WORK. ALL WORK SHALL BE PERFORMED IN A WORKMANLIKE MANNER IN ACCORDANCE WITH ACCEPTED CONSTRUCTION PRACTICES.
2. BY SUBMITTING A BID FOR THIS WORK, THE CONTRACTOR ACKNOWLEDGES THAT HE HAS THOROUGHLY REVIEWED AND UNDERSTOOD THE CONSTRUCTION DOCUMENTS, VISITED THE SITE AND IS FAMILIAR WITH THE CONDITIONS ENCOUNTERED AT THE SITE.
3. THE CONTRACTOR, IF AWARDED THE CONTRACT, WILL NOT BE ALLOWED ANY EXTRA COMPENSATION BY REASON OF ANY MATTER OR THING WHICH SUCH THE CONTRACTOR MIGHT NOT HAVE FULLY INFORMED HIMSELF PRIOR TO BIDDING.
4. NO PLEA OF IGNORANCE OF CONDITIONS THAT EXIST, OR OF DIFFICULTIES THAT MAY BE ENCOUNTERED OR OF ANY OTHER RELEVANT MATTER CONCERNING THE WORK TO BE PERFORMED WILL BE ACCEPTED AS A REASON FOR ANY FAILURE OR OMISSION ON THE PART OF THE CONTRACTOR TO FULFILL THE REQUIREMENTS OF THE CONTRACT DOCUMENTS.
5. IT IS UNDERSTOOD BY THE OWNER THAT THE CONTRACTOR IN SUBMITTING HIS BID, WARRANTS THAT HE HAS CAREFULLY EXAMINED THE SITE OF THE PROJECT TO ACQUAINT HIMSELF WITH THE SURROUNDING PROPERTIES, THE MEANS OF APPROACH TO THE SITE, THE CONDITIONS OF THE ACTUAL JOB SITE, THE FACILITIES FOR DELIVERING, STORING, PLACING, HANDLING AND THE REMOVAL OF MATERIALS AND EQUIPMENT AND ANY AND ALL DIFFICULTIES THAT MAY BE ENCOUNTERED DURING THE EXECUTION OF THE ALL WORK IN ACCORD WITH THE CONTRACT DOCUMENTS.
6. THE LOCATION OF EXISTING UNDERGROUND UTILITIES HAVE NOT BEEN VERIFIED BY THE OWNER OR ITS REPRESENTATIVE. THE CONTRACTOR IS RESPONSIBLE FOR HAVING ALL UNDERGROUND UTILITIES LOCATED WITHIN THE LIMITS OF CONSTRUCTION AND ACCEPTS FULL RESPONSIBILITY FOR ANY AND ALL DAMAGES WHICH MIGHT BE CAUSED THE CONTRACTOR FAILURE TO LOCATE ALL UNDERGROUND UTILITIES BEFORE COMMENCING WORK.
7. SHOULD ANY ERROR OR INCONSISTENCY APPEAR IN THE DRAWINGS OR SPECIFICATIONS, THE CONTRACTOR BEFORE PROCEEDING WITH THE WORK MUST MAKE MENTION OF THE SAME TO THE ENGINEER AND OWNER FOR PROPER ADJUSTMENT AND IN NO CASE PROCEED WITH THE WORK IN UNCERTAINTY OR WITH INSUFFICIENT DRAWINGS.
8. THE CONTRACTOR AND EACH SUBCONTRACTOR SHALL BE RESPONSIBLE FOR VERIFICATION OF ALL MEASUREMENTS AT THE SITE BEFORE ORDERING ANY MATERIALS OR DOING ANY WORK. NO EXTRA CHARGE OR CONSIDERATION SHALL BE ALLOWED DUE TO DIFFERENCE BETWEEN ACTUAL DIMENSIONS AND DIMENSIONS INDICATED ON THE CONSTRUCTION DRAWINGS. ANY DISCREPANCY IN DIMENSIONS WHICH MAY BE FOUND SHALL BE SUBMITTED TO THE ENGINEER AND THE OWNER REPRESENTATIVE FOR CONSIDERATION BEFORE THE CONTRACTOR PROCEEDS WITH THE WORK IN THE AFFECTED AREAS. THE CONTRACTOR'S WORK SHALL NOT VARY FROM THE PLANS WITHOUT THE EXPRESSED APPROVAL OF THE OWNER OR ITS REPRESENTATIVE.
9. TRADE, PRODUCT NAMES OR MANUFACTURER'S NAMES OR CATALOG NUMBERS AND INDICATIONS OF EXISTING PRODUCT TYPES SHOWN ON THE DRAWINGS ARE BELIEVED TO BE ACCURATE. IF THEY ARE DISCOVERED TO BE INACCURATE, NOTIFY ENGINEERS IMMEDIATELY AND DO NOT PROCEED WITHOUT INSTRUCTIONS.
10. PRIOR TO STARTING CONSTRUCTION, THE CONTRACTOR SHALL PROTECT ALL AREAS FROM DAMAGES WHICH MAY OCCUR DURING CONSTRUCTION. ANY DAMAGES TO NEW OR EXISTING SURFACES, STRUCTURES OR EQUIPMENT SHALL BE IMMEDIATELY REPAIRED OR REPLACED TO THE SATISFACTION OF THE PROPERTY OWNER. THE CONTRACTOR SHALL BEAR THE COST OF REPAIRING OR REPLACING ANY DAMAGES AREAS.
11. THE CONTRACTOR SHALL TAKE ALL PRECAUTIONARY MEASURES AND EFFORTS TO PROTECT THE STRUCTURAL INTEGRITY OF EXISTING STRUCTURES. WHEN WORK IS PERFORMED IN THE VICINITY OF EXISTING STRUCTURE, THE STRUCTURAL INTEGRITY AND STABILITY SHALL BE MONITORED AT ALL TIMES DURING EVERY PHASE OF THE CONSTRUCTION.
12. THE CONTRACTOR SHALL PROTECT EXISTING PROPERTY LINE MONUMENTATION. ANY MONUMENTATION DISTURBED OR DESTROYED, AS JUDGED BY THE OWNER OR OWNER'S REPRESENTATIVE SHALL BE REPLACED AT THE CONTRACTOR'S EXPENSE UNDER THE SUPERVISION OF A LICENSED LAND SURVEYOR.
13. NEW CONSTRUCTION ADDED TO EXISTING CONSTRUCTION SHALL BE MATCHED IN FORM, TEXTURE, MATERIAL AND PAINT COLOR EXCEPT AS NOTED IN THE PLANS.
14. WHERE INDICATED ON THE PLANS, THE CONTRACTOR SHALL PAINT ALL NEW ANTENNAS SHROUDS AND RELATED MOUNTING HARDWARE TO MATCH THE EXISTING ADJACENT SURFACES, THE CONTRACTOR SHALL NOT USE A METAL BASED PAINT FOR ANTENNAS. ALL SURFACE CONTAMINATION SHALL BE REMOVED PRIOR TO PAINTING NEW SURFACES.
15. THE PLANS SHOW SOME KNOWN SUBSURFACE STRUCTURES, ABOVE-GROUND STRUCTURES AND/OR UTILITIES BELIEVED TO EXIST IN THE WORKING AREA, EXACT LOCATION OF WHICH MAY VARY FROM THE LOCATIONS INDICATED, IN PARTICULAR, THE CONTRACTOR IS WARNED THAT THE EXACT OR EVEN APPROXIMATE LOCATION OF SUCH PIPELINES, SUBSURFACE STRUCTURES AND/OR UTILITIES IN THE AREA MAY BE SHOWN OR MAY NOT BE SHOWN; AND IT SHALL BE HIS RESPONSIBILITY TO PROCEED WITH GREAT CARE IN EXECUTING ANY WORK. BEFORE YOU DIG, DRILL OR BLAST, CALL THE UNDERGROUND SERVICES ALERT NUMBER ON SHEET T1 AT THE REQUIRED TIME.
16. ALL EXISTING ACTIVE SEWER, WATER GAS, ELECTRIC, AND OTHER UTILITIES WHERE ENCOUNTERED IN THE WORK SHALL BE PROTECTED AT ALL TIMES, WHERE REQUIRED FOR THE PROPER EXECUTION OF THE WORK, SHALL BE RELOCATED AS DIRECTED BY ENGINEERS. EXTREME CAUTION SHOULD BE USED BY THE CONTRACTOR WHEN EXCAVATING OR PIER DRILLING AROUND OR NEAR UTILITIES. THE CONTRACTOR SHALL PROVIDE SAFETY TRAINING FOR THE WORKING CREW.
17. IF AN INACTIVE ELECTRICAL, TELEPHONE, SEWER, WATER OR ANY OTHER UTILITY ARE ENCOUNTERED AND INTERFERE WITH THE EXECUTION OF THE WORK, THE CONTRACTOR IS TO REMOVE THE UTILITY AND CAP, PLUG OR OTHERWISE TERMINATE THE UTILITY AT A POINT WHERE IT NO LONGER CONFLICT WITH THE WORK. THE UTILITY WORK SHALL BE DONE IN ACCORDANCE WITH THE UTILITY COMPANIES RECOMMENDATIONS AND PER LOCAL AUTHORITY HAVING JURISDICTION.
18. ALL UTILITY WORK INVOLVING CONNECTIONS TO EXISTING SYSTEMS SHALL BE COORDINATED WITH THE OWNER OR OWNER'S REPRESENTATIVE AND THE UTILITY OWNER BEFORE EACH AND EVERY CONNECTION TO EXISTING SYSTEMS IS MADE.
19. MAINTAIN FLOW FOR ALL EXISTING UTILITIES.
20. THE CONTRACTOR SHALL RESTORE ALL PUBLIC OR PRIVATE PROPERTY DAMAGED OR REMOVED TO AT LEAST AS GOOD OF CONDITION AS BEFORE DISTURBED AS DETERMINED BY THE OWNER OR OWNER'S REPRESENTATIVE.
21. PROTECT FINISHED SURFACES INCLUDING JAMBS AND HEADS OF OPENINGS USED AS PASSAGEWAYS THROUGH WHICH EQUIPMENT AND MATERIALS WILL PASS.
22. PROVIDE PROTECTION FOR EQUIPMENT ROOM SURFACES PRIOR TO ALLOWING EQUIPMENT OR MATERIALS TO BE MOVED OVER SUCH SURFACES.
23. MAINTAIN FINISHED SURFACES CLEAN, UNARMED AND SUITABLY PROTECTED UNTIL JOB SITE IS ACCEPTED BY THE OWNER.
24. IN THE EVENT OF DAMAGE TO AN EXISTING STRUCTURE, THE CONTRACTOR SHALL NOTIFY THE OWNER OR ITS REPRESENTATIVE IMMEDIATELY, AND THEN PROMPTLY MAKE ALL REPLACEMENTS AND REPAIRS TO THE SATISFACTION OF THE OWNER. THE OWNER MAY ELECT TO USE A THIRD PARTY CONTRACTOR TO PERFORM THE REPAIRS. ALL EXPENSES ASSOCIATED WITH THE REPAIRS AND REPLACEMENTS SHALL BE PAID BY THE GENERAL CONTRACTOR SELECTED FOR THIS CONTRACT.
25. ADDITIONAL TIME REQUIRED TO SECURE REPLACEMENT AND MAKE REPAIRS WILL NOT BE CONSIDERED BY THE OWNER TO JUSTIFY AN EXTENSION IN THE CONTRACT TIME FOR COMPLETION.

1.3 ACCESS

1. USE MOST DIRECT ROUTE FROM PUBLIC STREET AS AGREED TO BY COMPOUND OR BUILDING OWNER. FOR ACCESS TO AN EXISTING BUILDING INTERIOR, USE LOADING DOCK AS AGREED TO BY BUILDING OWNER.
2. COORDINATE WITH SITE OWNER CONSTRUCTION SCHEDULE & SITE ACCESS. ENSURE THAT THE OWNER OF PARENT PARCEL IS NOTIFIED IN WRITING OF CONSTRUCTION ACTIVITIES.
3. A LIST OF WORKERS INVOLVED IN THIS PROJECT SHALL BE PROVIDED TO THE PROPERTY OWNER OR ITS REPRESENTATIVE.
4. THE CONTRACTOR SHALL COORDINATE ALL SPECIAL CONSIDERATIONS OF CONSTRUCTION SUCH AS NOISY OPERATION, INTERRUPTION OF ANY MECHANICAL AND/OR ELECTRICAL SERVICES, MATERIAL DELIVERIES AND STORAGE, STAGING AREA, CRANE LIFTS WITH THE OWNER PRIOR TO THE START OF THE WORK.
5. CONTRACTOR SHALL COORDINATE WITH AN OWNER REPRESENTATIVE, THE TEMPORARY REMOVAL OF FENCE, LANDSCAPING & ANY EXPECTED DAMAGE TO ACCESS ROAD OR ADJACENT REPAIR OF PROPERTY PRIOR TO COMMENCING THE WORK.
6. THE CONTRACTOR SHALL COORDINATE WORK HOURS & STAGING AREAS WITH OWNER.
7. CONTRACTOR TO NOTIFY PROPERTY OWNER OF CONSTRUCTION START DATE WELL IN ADVANCE OF CONSTRUCTION.

1.4 SITE MAINTENANCE

1. REMOVE STAINING OR REACTIVE MATERIALS FROM NEW AND EXISTING SURFACES IMMEDIATELY. REMOVE HAZARDOUS ACCUMULATIONS OF DEBRIS PROMPTLY, AT LEAST DAILY. CONFINE DUST PRODUCING OPERATIONS DURING CUTTING, DRILLING, PAINTING AND FINISHING. THERE SHOULD BE NO OVER SPRAYING PAINT IN PARKING AREA. VACUUM IMMEDIATELY AFTER COMPLETION.
2. THERE SHALL NOT BE ANY CREATION OF NOISE OUTSIDE THE NORMAL HOURS OF 7 AM TO 6 PM, UNLESS OTHERWISE AGREED UPON WITH THE OWNER. NOISE SHOULD BE KEPT TO A MINIMUM THROUGHOUT CONSTRUCTION.
3. NOISE AND EXISTING BUILDING STRUCTURE VIBRATION GENERATED BY CONSTRUCTION PROCEDURES, EQUIPMENT, TOOL AND OPERATIONS ARE TO BE KEPT TO A PRACTICABLE MINIMUM. WHERE USE OF HIGH NOISE LEVEL EQUIPMENT IS UNAVOIDABLE, AND CAN BE HEARD, CONFINE TO HOURS BEFORE 7 A.M. AND AFTER 6 P.M. MONDAY THROUGH FRIDAY OR AS AGREED TO BY BUILDING OWNER.
4. THE CONTRACTOR IS TO PROVIDE PORTABLE FIRE EXTINGUISHERS WITH A RATING OF NOT LESS THAN 2-A OR 2 ABC WITHIN 75FT OF TRAVEL TO ALL PORTIONS OF THE CONSTRUCTION AREA.
5. THE CONTRACTOR IS RESPONSIBLE FOR MAINTAINING A NEAT AND ORDERLY SITE, YARD AND GROUNDS, REMOVE AND DISPOSE LEGALLY OFF SITE ALL RUBBISH, WASTE MATERIALS, LITTER, AND ALL FOREIGN SUBSTANCES. REMOVE PETROCHEMICAL SPILLS, STAINS AND OTHER FOREIGN DEPOSITS. RAKE GROUNDS TO A SMOOTH EVEN-TEXTURED SURFACE.
6. AT PROJECT COMPLETION, REMOVE TEMPORARY SERVICES, CONSTRUCTION EQUIPMENT, TOOLS AND FACILITIES, MOCKUPS, TEMPORARY STRUCTURES, SURPLUS MATERIALS, DEBRIS, AND RUBBISH FROM BUILDING OWNERS PROPERTY. PUT SITE IN NEAT, ORDERLY CONDITION, READY FOR USE. LEAVE ROOF AREAS, PIPE SPACES AND OTHER SPACES CLEAN AND FREE FROM DEBRIS ON A DAILY BASIS.
7. THE SITE AND/OR BUILDING SECURITY SHALL BE MAINTAINED AT ALL TIMES DURING CONSTRUCTION IN ORDER TO PREVENT UNAUTHORIZED PERSONS FROM ENTERING THE PREMISES. EXISTING AND NEW EQUIPMENT AND MATERIALS REMAIN THE CONTRACTOR'S RESPONSIBILITY AT ALL TIME DURING CONSTRUCTION.
8. THE TENANT'S INGRESS AND EGRESS OF THE SITE AND/OR BUILDING SHALL BE MAINTAINED THROUGHOUT CONSTRUCTION.
9. THE CONTRACTOR SHALL TAKE ALL MEASURE NECESSARY TO MAINTAIN POLLUTION CONTROL, COMPLY WITH ALL GOVERNING REGULATION PERTAINING TO ENVIRONMENTAL PROTECTION, AND PROMPTLY REMOVE ALL DEBRIS AND ACCUMULATION OF MATERIALS RESULTING FROM THE WORK.

1.5 TEMPORARY FACILITIES

1. THE CONTRACTOR SHALL CONSIDER THAT WATER, POWER AND LIGHT ARE NOT AVAILABLE AT THIS SITE. WHEN PERMANENT POWER IS ESTABLISHED, ALL CONTRACTORS MAY USE THE SERVICE CONNECTION FOR PRODUCTION WORK ONLY, PROVIDED THAT ELECTRICAL CORDS AND CONNECTIONS ARE FURNISHED BY THE CONTRACTORS AND ARE DISCONNECTED AND PROPERLY STORED DURING NON-WORKING HOURS.
2. THE CONTRACTOR IS RESPONSIBLE TO PROVIDE TEMPORARY POWER, WATER AND TOILET FACILITIES AS REQUIRED BY THE PROPERTY OWNER OR GOVERNING AGENCY.

2 – DEMOLITION AND EXISTING STRUCTURAL ALTERATION

2.1 DEMOLITION SPECIFICS

1. GENERAL CONTRACTOR IS TO DEMOLISH AND REMOVE FROM SITE (AND DISPOSE OF APPROPRIATELY) ALL ITEMS NOTED FOR DEMOLITION IN THE ARCHITECTURAL, CIVIL, ELECTRICAL AND/OR STRUCTURAL DRAWINGS, INCLUDING BELOW GRADE FOUNDATION AND STRUCTURES. CONTRACTOR SHALL COORDINATE WITH THE OWNER REPRESENTATIVE THE DISPOSAL OF EQUIPMENT & MATERIALS.
2. GENERAL CONTRACTOR IS TO EXERCISE UTMOST CARE DURING DEMOLITION AND PROMPTLY INFORM THE ENGINEER OF ANY DEVIATION TO THE EXISTING STRUCTURE FROM WHAT IS SHOWN IN THESE PLANS PRIOR TO PROCEEDING WITH THE WORK.
3. GENERAL CONTRACTOR IS SOLELY RESPONSIBLE FOR THE SHORING, BRACING, PROVIDING LATERAL SUPPORT, AND FOR MAINTAINING THE INTEGRITY OF THE EXISTING STRUCTURE DURING ALL PHASES OF THE DEMOLITION AND CONSTRUCTION AND SHALL PROVIDE, IF REQUIRED, SIGNED & SEALED SHOP DRAWINGS, BY A REGISTERED PROFESSIONAL ENGINEER, FOR THE SHORING OF ALL WALLS, BEAMS, SLABS, ROOF JOISTS, OR OTHER ELEVATED STRUCTURAL ITEMS, THAT ARE HAVING THE SUPPORT BELOW NOTED FOR DEMOLITION.
4. ANY DAMAGE DUE TO DEMOLITION, OR OTHER CONSTRUCTION ACTIVITIES, DONE TO ANY EXISTING SURFACE TO REMAIN SHALL BE REPAIRED TO MATCH EXISTING AT NO ADDITIONAL COST TO THE OWNER.

2.2 CUTTING & PATCHING

1. DO NOT DRILL OR CUT EXISTING FLOOR JOISTS, BEAMS, COLUMNS OR OTHER STRUCTURAL ELEMENTS UNLESS SPECIFICALLY INDICATED. DRILL SLABS WHERE APPROVED. CORE DRILL CIRCULAR OPENINGS THROUGH CONCRETE SLAB. LINE DRILL FOR RECTANGULAR OPENINGS. MAKE OPENINGS OF PROPER SIZE FOR CONDUIT, DUCTS, PIPES AND OTHER ITEMS PASSING THROUGH OPENINGS. MAKE ALL NEW HOLES OR OPENINGS BE WEATHER TIGHT OR FIRE SAFE AS REQUIRED BY LOCAL BUILDING CODES & ORDINANCES.
2. PREPARE, SUBMIT AND RECEIVE APPROVAL OF SLEEVES AND OPENING DRAWINGS BEFORE LOCATING SLEEVES AND OPENINGS IN NEW CONSTRUCTION AND BEFORE DRILLING EXISTING STRUCTURE. SHOW EACH OPENING AND SLEEVE IN THE ENTIRE PROJECT.
3. SEAL WATER TIGHT AND PROTECT WITH FIRE PROOFING MATERIALS NEW SLEEVES AND OPENINGS THROUGH ROOFS, FLOORS AND INVERTICAL CHASES AS REQUIRED BY CODE AND INDUSTRY STANDARDS. ALL FLOOR AND WALL PENETRATIONS SHALL BE SEALED WITH FIRE RETARDANT COMPOUND MEETING UL CAJ5045.
4. THE CONTRACTOR SHALL PROVIDE THE FIRE MARSHALL APPROVED MATERIALS TO FILL/SEAL PENETRATIONS THROUGH FIRE RATED ASSEMBLIES.
5. WHERE CUTTING OF EXISTING SURFACES OR REMOVAL OF EXISTING FINISHES IS REQUIRED TO PERFORM THE WORK UNDER THIS CONTRACT AND A NEW FINISH IS NOT INDICATED, FILL RESULTING OPENINGS AND PATCH THE SURFACE AFTER DOING THE WORK AND FINISH TO MATCH ADJACENT EXISTING SURFACES.
6. EXCEPT IN SPACE WHERE NO WORK UNDER THIS CONTRACT IS REQUIRED, ENCLOSE EXISTING AND NEW CONDUITS, DUCTS, PIPES AND SIMILAR ITEMS IN FURRING WHERE SUCH ITEMS PASS THROUGH FINISHED SPACES WHETHER OR NOT FURRING IS INDICATED.
7. ALL CONCRETE AND MASONRY PENETRATIONS SHALL BE DONE USING ROTARY ACTION ONLY (NO HAMMERING ACTION). X-RAYS ARE TO BE TAKEN PRIOR TO DRILLING.
8. CORE LOCATIONS IF REQUIRED SHALL BE CHOSEN SO AS TO AVOID CUTTING ANY REINFORCING BARS. FIRESTOP FLOOR OR WALL PENETRATION WITH TWO HOUR RATED SEALANT TO MEET UL CAJ5045. PROVIDE WEATHERPROOFING OF ANY ROOF PENETRATIONS.9.REPAIR, PATCH, FINISH AND/OR REFINISH AS APPLICABLE TO MATCH ADJACENT EXISTING

FINISHES THOSE EXISTING SURFACES DAMAGED OR NEW PROPOSED SURFACES DURING PERFORMANCE OF THE WORK UNDER THIS CONTRACT.

10. WHERE CONDUITS, DUCTS, PIPES AND SIMILAR ITEMS ARE SHOW TO BE INSTALLED IN EXISTING WALLS OR PARTITIONS. NEATLY CHASE THE WALLS OR PARTITIONS. INSTALL THE TIMES AND PATCH THE WALLS OR PARTITIONS TO MAKE THE INSTALLATION NOT DISCERNIBLE IN THE FINISHED WORK.
11. WHERE A NEW CUTTING IS NOT SCHEDULED, INSTALL NEW CONDUITS AND PIPES IN EVERY CASE, AND NEW DUCT WHERE POSSIBLE ABOVE EXISTING CEILING. REMOVE EXISTING CEILING AS NECESSARY. AFTER INSTALLATION OF CONCEALED WORK, REINSTALL REMOVED CEILING AND PATCH AND REFINISH TO MATCH ADJACENT UNREMOVED CEILINGS.
12. REPAIR ALL METAL SURFACES THAT HAVE BEEN CUT OR DAMAGED BY REMOVING ANY EXISTING RUST AND APPLYING COLD GALVANIZATION.

3 – SITE WORK

3.1 CLEARING AND GRUBBING

1. CLEARING OF TREES AND VEGETATION ON THE SITE SHOULD BE HELD TO A MINIMUM. ONLY THE TREES NECESSARY FOR THE CONSTRUCTION OF THE FACILITY SHALL BE REMOVED. ANY DAMAGES TO PROPERTY OUTSIDE THE CONSTRUCTION LIMIT SHALL BE REPAIRED OR REPLACED AT THE CONTRACTOR'S EXPENSE.
2. THE CONTRACTOR SHALL: PROTECT EXISTING TREES, VEGETATION, LANDSCAPING MATERIALS AND SITE IMPROVEMENTS NOT SCHEDULED FOR CLEARING OR REMOVAL WHICH MIGHT BE DAMAGED BY CONSTRUCTION ACTIVITIES.
3. TRIM EXISTING TREES AND VEGETATION AS RECOMMENDED BY THE ARBORIST FOR PROTECTION DURING CONSTRUCTION.
4. CLEAR AND GRUB STUMPS, VEGETATION, DEBRIS, RUBBISH, DESIGNATED TREES AND SITE IMPROVEMENT.
5. STRIP AND STOCKPILE TOPSOIL.
6. PROTECT TEMPORARILY ADJACENT PROPERTY, STRUCTURES, BENCHMARKS AND MONUMENTS.
7. MARK DESIGNATED TREES AND VEGETATION DURING CONSTRUCTION ACTIVITIES.
8. PROVIDE TEMPORARY EROSION CONTROL, SILTATION CONTROL AND DUST CONTROL.
9. REMOVE AND LEGALLY DISPOSE OF CLEARED MATERIALS.

3.2 EXCAVATION AND BACKFILL

1. ALL SUITABLE BORROW MATERIAL FOR BACK FILL OF THE SITE SHALL BE INCLUDED IN THE BID. EXCESS TOPSOIL AND UNSUITABLE MATERIAL SHALL BE DISPOSED OF OFF SITE AT LOCATION APPROVED BY GOVERNING AGENCIES PRIOR TO DISPOSAL.
2. ALL SITE FILL SHALL MEET SELECTED FILL STANDARDS AS DEFINED BY THE OWNER'S REPRESENTATIVE ON THE DRAWINGS OR GEOTECHNICAL REPORT RECOMMENDATIONS.
3. THIS PROJECT INCLUDES:
    - EXCAVATION, TRENCHING, FILLING, COMPACTING AND GRADING FOR STRUCTURES, SITE IMPROVEMENTS, ACCESS ROAD AND UTILITIES.
    - ALL MATERIALS FOR SUBBASE, DRAINAGE FILL, BACK FILL AND GRAVEL FOR SLABS, PAVEMENT AND IMPROVEMENTS.
    - ROCK EXCAVATION WITHOUT BLASTING.
    - SUPPLY OF ADDITIONAL MATERIALS FROM OFF SITE AS REQUIRED.
    - REMOVAL AND LEGAL DISPOSAL OF EXCAVATED MATERIALS AS REQUIRED.
4. FILL LAYERS THAT REQUIRE COMPACTION SHALL HAVE A MAXIMUM THICKNESS OF 6 INCHES.
5. THE COMPACTING UNDER STRUCTURES, BUILDING SLABS, STEPS, PAVEMENT AND WALKWAYS SHALL BE 95% MAXIMUM DENSITY, ASTM D-1557, TESTED IN EACH OF THE COMPACTING LAYERS AT EACH COMPACTING SITE, OR AT LEAST IN EACH 100CU. PER YARDS OF MATERIAL VOLUME.
6. THE COMPACTING UNDER LAWNS OR UNPAVED AREAS SHALL BE 85% MAXIMUM DENSITY, ASTM D1557.
7. THE COMPACTED LAYERS SHALL NOT EXCEED 8 INCHES.
8. AREAS THAT DO NOT MEET ASTM D-1557 REQUIREMENTS MUST BE RECOMPACTED AT THE CONTRACTOR'S EXPENSES.
9. ALL TRENCH EXCAVATIONS AND ANY REQUIRED SHEETING AND SHORING SHALL BE DONE IN ACCORDANCE WITH OSHA REGULATIONS FOR CONSTRUCTION.
10. WHERE UNSTABLE SOIL CONDITIONS EXIST, LINE THE GRUBBED AREAS WITH GEOTEXTILE FABRIC (MIRAFI 500X OR APPROVED EQUIVALENT) PRIOR TO PLACING FILL OR BASE MATERIAL.
11. THE USE OF EXPLOSIVE IS PROHIBITED ON SITE.
12. ALL EXCAVATION ON WHICH CONCRETE IS TO BE PLACED SHALL BE SUBSTANTIAL HORIZONTAL, UNDISTURBED AND BE FREE FROM LOOSE MATERIAL AND EXCESS GROUND WATER. DEWATERING FOR EXCESS GROUND WATER SHALL BE PROVIDED IF REQUIRED.
13. ANY EXCAVATION OVER THE REQUIRED DEPTH SHALL BE FILLED WITH OTHER MECHANICALLY COMPACTED GRANULAR MATERIAL OR CONCRETE OF THE SAME QUALITY SPECIFIED FOR THE FOUNDATION. CRUSHED STONE MAY BE USED TO STABILIZE THE BOTTOM OF THE EXCAVATION. STONE, IF USED, SHALL NOT BE USED AS COMPILING CONCRETE THICKNESS.
14. BACK FILL SHALL USE APPROVED MATERIALS CONSISTING OF LOAM, SANDY CLAY, SAND, GRAVEL OR SOFT SHALE AND SHALL BE FREE FROM CLODS OR STONES OVER 2 ½".
15. AFTER COMPLETION OF THE FOUNDATION AND OTHER CONSTRUCTION BELOW GRADE AND BEFORE BACK FILLING, ALL EXCAVATIONS SHALL BE CLEAN OF UNSUITABLE MATERIALS SUCH AS VEGETATION, DEBRIS, TRASH AND ANY FOREIGN MATERIAL.

3.3 DRAINAGE

1. THE CONTRACTOR IS RESPONSIBLE FOR MAINTAINING POSITIVE DRAINAGE AWAY FROM BUILDING OR EQUIPMENT ON THE SITE AT ALL TIMES. SILT AND EROSION CONTROL SHALL BE MAINTAINED ON THE DOWNSTREAM SIDE OF THE SITE AT ALL TIMES. ANY DAMAGE TO ADJACENT PROPERTIES WILL BE CORRECTED AT THE CONTRACTOR'S EXPENSES.
2. THE CONTRACTOR SHALL BE RESPONSIBLE FOR DEWATERING AND THE MAINTENANCE OF SURFACE DRAINAGE DURING THE COURSE OF WORK.
3. ANY DRAIN, FIELD TILE OR DRAINAGE STRUCTURE ENCOUNTERED DURING CONSTRUCTION SHALL BE RETURNED TO ITS ORIGINAL OR BETTER CONDITIONS AFTER CONSTRUCTION AND BE NOTED ON THE RECORD DOCUMENTS.

3.4 EROSION CONTROL

1. CONTRACTOR SHALL PROVIDE ALL EROSION AND SEDIMENTATION CONTROL MEASURES AS REQUIRED BY LOCAL CODES AND ORDINANCES TO PROTECT EMBANKMENTS FROM SOIL LOSS AND TO PREVENT ACCUMULATION OF SOIL AND SILT IN STREAMS AND DRAINAGE PATHS LEAVING THE CONSTRUCTION AREA. THIS MAY INCLUDE SUCH MEASURES AS SILT FENCE, STRAW BALES, SEDIMENT BARRIERS AND CHECK DAMS.
2. EROSION CONTROL MEASURES MAY BE REQUIRED IN ADDITION TO THOSE SHOWN ON DRAWINGS WHERE DETERMINED NECESSARY BY ACTUAL SITE CONDITIONS.
3. PRIOR TO ANY OTHER CONSTRUCTION, A STABILIZED CONSTRUCTION ENTRANCE SHALL BE CONSTRUCTED AT EACH ENTRY TO OR FROM THE SITE.
4. THE CONSTRUCTION EXIT SHALL BE MAINTAINED IN A CONDITION WHICH WILL PREVENT TRACKING OR FLOW OF MUD ONTO PUBLIC RIGHT OF WAYS. THIS MAY REQUIRE PERIODIC TOP DRESSING WITH STONE AS CONDITIONS DEMAND, REPAIR AND/OR CLEAN OUT OF ANY STRUCTURES USED TO TRAP SEDIMENTS. ALL MATERIALS SPILLED, DROPPED WASHED OR TRACKED FROM VEHICLE OFF SITE ONTO ROADWAY OR INTO STORM DRAINS MUST BE REMOVED.
5. IMMEDIATELY AFTER THE ESTABLISHMENT OF CONSTRUCTION ENTRANCES/EXITS, ALL PERIMETER EROSION CONTROL DEVICES AND STORMWATER MANAGEMENT DEVICES SHALL BE INSTALLED PRIOR TO ANY OTHER CONSTRUCTION.
6. ALL SILT BARRIERS MUST BE PLACED AS ACCESS IS OBTAINED DURING CLEARING. NO GRADING SHALL BE DONE UNTIL SILT BARRIER INSTALLATION AND DETENTION FACILITIES ARE CONSTRUCTED. SILT BARRIERS SHALL BE PLACED AT ALL DOWNSTREAM TOE OF CUT AND FILL SLOPES.
7. THE LOCATION OF SOME EROSION CONTROL DEVICES MAY HAVE TO BE ALTERED FROM WHAT IS SHOWN ON THE APPROVED PLANS IF DRAINAGE PATTERNS DURING CONSTRUCTION ARE DIFFERENT FROM THE FINAL PROPOSED DRAINAGE PATTERNS. IT IS THE CONTRACTOR RESPONSIBILITY TO ACCOMPLISH EROSION CONTROL FOR DRAINAGE PATTERN CREATED AT VARIOUS STAGES DURING CONSTRUCTION. ANY DIFFICULTY IN CONTROL EROSION DURING ANY PHASE OF CONSTRUCTION SHALL BE REPORTED TO THE ENGINEER IMMEDIATELY. ANY DISTURBED AREA LEFT EXPOSED FOR A PERIOD GREATER THAN (7) DAYS SHALL BE STABILIZED WITH TEMPORARY SEEDING.
8. THE CONSTRUCTION OF THE SITE WILL INITIATE WITH THE INSTALLATION OF EROSION CONTROL MEASURES SUFFICIENT TO CONTROL SEDIMENT DEPOSIT AND EROSION. ALL SEDIMENT CONTROL WILL BE MAINTAINED UNTIL ALL UPSTREAM GROUND WITHIN THE CONSTRUCTION AREA HAS BEEN COMPLETELY STABILIZED WITH PERMANENT VEGETATION AND ALL ROADS AND DRIVEWAYS HAVE BEEN COMPLETED. THE CONTRACTOR SHALL INSPECT EROSION CONTROL MEASURES AT THE END OF EACH WORKING DAY TO ENSURE MEASURES ARE FUNCTIONING PROPERLY.
9. FAILURE TO INSTALL, OPERATE OR MAINTAIN ALL EROSION CONTROL MEASURES WILL RESULT IN ALL CONSTRUCTION BEING STOPPED ON THE JOB SITE UNTIL SUCH MEASURES ARE CORRECTED.
10. THE CONTRACTOR SHALL REMOVE ACCUMULATED SILT WHEN THE SILT IS WITHIN 12" OF THE TOP OF THE SILT FENCE UTILIZED FOR EROSION CONTROL.
11. ALL OPEN SWALES MUST BE GRASSED, AND RIP-RAP MUST BE PLACED AS REQUIRED TO CONTROL EROSION. ALL CUT AND FILL SLOPES MUST BE SURFACE ROUGHENED AND VEGETATED WITHIN (7) DAYS OF CONSTRUCTION.
12. SEEDING AND MULCHING OF THE SITE WILL BE ACCOMPLISHED AS SOON AS POSSIBLE AFTER COMPLETION OF THE SITE DEVELOPMENT. THE CONTRACTOR IS RESPONSIBLE FOR PROVIDING AND MAINTAINING AN ADEQUATE COVER OF VEGETATION OVER THE SITE FOR A PERIOD OF ONE YEAR.
13. SEEDBED PREPARATION: AREA TO BE SEEDED SHALL BE LOOSE AND FRIABLE TO A DEPTH OF AT LEAST 3". THE TOP LAYER SHALL BE LOOSENED BY RAKING, DISKING OR OTHER ACCEPTABLE MEANS BEFORE SEEDING OCCURS. IN LIEU OF SOIL TEST RESULTS, APPLY 50 LBS. OF DOLOMITIC LIMESTONE AND 25 LBS. OF 10-10-10 FERTILIZER PER 1000 SF. HARROW OR DISK LIMESTONE AND FERTILIZER INTO SOIL TO A DEPTH OF AT LEAST 3" ON THE SLOPES FLATTER THAN 3:1.
14. SEEDING: APPLY 5-6 LBS. PER 1000 SF. OF KENTUCKY 31 TALL FESCUE. APPLY SEED UNIFORMLY WITH A CYCLONE SEEDED DRILL CULTIPACKER SEEDER OR HYDROSEEDER (SLURRY INCLUDES SEEDS AND FERTILIZER RECOMMENDED ON STEEP SLOPES ONLY) ON MOIST, FIRM SEEDBED. MAXIMUM SEED DEPTH SHOULD BE ½" WHEN USING THE HYDROSEEDER METHOD. IRRIGATE UNTIL VEGETATION IS FIRMLY ESTABLISHED IF SOIL MOISTURE IS NOT SUFFICIENT TO SUPPORT ADEQUATE GROWTH.
15. IN CONCENTRATED AREAS, ALL SLOPES STEEPER THAN 2.5:1 AND LENGTH OF 10 FEET OR GREATER, AND CUTS AND FILLS WITHIN STREAM BUFFER, SHALL BE STABILIZED WITH THE APPROPRIATE EROSION CONTROL MATTING OR BLANKETS.
16. RIPRAP SHALL BE CLEAN, HARD, SOUND, DURABLE, UNIFORM IN QUALITY, AND FREE OF ANY DETRIMENTAL QUANTITY OF SOFT, FRIABLE, THIN, ELONGATED OR LAMINATED PIECES, DISINTEGRATED MATERIAL, ORGANIC MATTER, OIL, ALKALI OR OTHER DELETERIOUS SUBSTANCES.

3.5 GRADING

1. THE CONTRACTOR SHALL SEED THE GRADED AREAS PER DOT STANDARDS. AN SI GEOSOLUTIONS LAND LOCK CS2 EROSION CONTROL BLANKET SHALL BE INSTALLED PER THE MANUFACTURER'S INSTRUCTIONS.
2. THE CONTRACTOR SHALL PROVIDE ADEQUATE WATERING TO ENSURE FAVORABLE GROWTH OF VEGETATION FOR A PERIOD OF 6 MONTHS.
3. ALL GROUNDING, UTILITIES AND UNDERGROUND EQUIPMENT EXPOSED BY GRADING SHALL BE REPLACED AND PROPERLY CONNECTED TO THE EXISTING PORTION OF THE ORIGINAL SYSTEM PER APPROVED CODES AND JURISDICTION REQUIREMENTS.
4. THE GRADING TOLERANCE FOR FILL UNDER BUILDING SLABS SHALL BE ±½ INCH MEASURE WITH 10 FT STRAIGHTEDGE.
5. THE GRADING TOLERANCES OUTSIDE BUILDING LINES SHALL BE ±1 INCH FOR LAWNS, UNPAVED AREAS AND WALKS; AND ±½ INCH UNDER PAVEMENT.
6. THE CONTRACTOR IS RESPONSIBLE FOR REPAIRING AND RE-GRADING ROADWAY AND/OR FIELD FOLLOWING THE INSTALLATION OF UTILITIES.
7. ANY FILLS PLACED ON EXISTING SLOPES THAT ARE GREATER THAN 10 HORIZONTAL TO 1 VERTICAL SHALL BE PROPERLY BENCHED INTO THE EXISTING SLOPE.
8. THE CONTRACTOR SHALL TAKE SPECIAL CARE TO RE-GRADE THE SITE AND MONITOR THE STABILITY OF EMBANKMENT STEEPER THAN 1:3 AT ALL TIME DURING CONSTRUCTION.
9. PROTECT EXISTING GRAVEL SURFACING AND SUB-GRADE IN AREAS WHERE EQUIPMENT LOADS WILL OPERATE. USE PLANKING OR OTHER SUITABLE MATERIALS DESIGNED TO SPREAD EQUIPMENT LOADS. REPAIR DAMAGE TO EXISTING GRAVEL SURFACING OR SUB-GRADE WHERE SUCH DAMAGE IS DUE TO THE CONTRACTOR OPERATIONS. DAMAGED GRAVEL SURFACING SHALL BE RESTORED TO MATCH THE ADJACENT UNDAMAGED GRAVEL SURFACING AND SHALL BE THE SAME THICKNESS.

11 – ELECTRICAL

11.1 GENERAL

1. THE CONTRACTOR SHALL PROVIDE ALL LABOR, MATERIALS, INSURANCE, EQUIPMENT, TRANSPORTATION, CONSTRUCTION TOOLS, ETC., FOR THE INSTALLATION OF COMPLETE AND PROPERLY OPERATING SYSTEMS.
2. INSTALLATION SHALL COMPLY WITH ALL APPLICABLE LAWS AND ORDINANCES OF ALL AUTHORITIES HAVING JURISDICTION AND WITH ALL ASSOCIATED UTILITY COMPANY REGULATIONS AND APPLICABLE REQUIREMENTS. INSTALLATION WILL ALSO COMPLY WITH THE LATEST EDITIONS OF ALL CODES AND STANDARDS OF THE ENTITIES LISTED ON SHEET SP1, NOTE 2. THE MOST STRINGENT CODE WILL APPLY IN THE CASE OF DISCREPANCIES OR DIFFERENCES IN THE CODE EQUIREMENTS.
3. THE CONTRACTOR SHALL SECURE ALL NECESSARY ELECTRICAL PERMITS AND PAY ALL REQUIRED FEES.
4. RECORD DRAWINGS: MAINTAIN A RECORD OF ALL CHANGES, SUBSTITUTIONS BETWEEN WORK AS SPECIFIED AND INSTALLED. RECORD CHANGES ON A CLEAN SET OF CONTRACT DOCUMENTS WHICH SHALL BE TURNED OVER TO THE CONSTRUCTION MANAGER UPON COMPLETION OF THE PROJECT.
5. ALL BROCHURES, OPERATION MANUALS, CATALOGS, SHOP DRAWINGS, SPECIFICATIONS, ETC., SHALL BE TURNED OVER TO THE CARRIER AT THE COMPLETION OF THE PROJECT.
6. GUARANTEE/WARRANTY: GUARANTEE INSTALLATION TO BE FREE OF DEFECTS, SHORTS, GROUND, ETC., FOR A PERIOD OF ONE YEAR. FURNISH WARRANTY SO THE DEFECTIVE MATERIAL AND/OR WORKMANSHIP WILL BE REPAIRED/REPLACED IMMEDIATELY UPON NOTIFICATION AT NO COST TO THE OWNER FOR PERIOD OF WARRANTY. IF, AFTER THIRTY (30) DAYS THE CORRECTIONS ARE NOT COMPLETE, THE OWNER RESERVES THE OPTION OF ARRANGING FOR THE NECESSARY REPAIRS AND BACKCHARGING THE CONTRACTOR FOR THE WORK.
7. THE CONTRACTOR SHALL COORDINATE WITH OTHER TRADES, AS NECESSARY.
8. DO NOT INTERRUPT EXISTING SERVICES WITHOUT WRITTEN PERMISSION OF THE OWNER OF THAT SERVICE AND WRITTEN PERMISSION OF THIS INSTALLATION'S CARRIER.
9. CHANGES: NO ADDITIONAL COSTS FOR LABOR OR MATERIALS WILL BE ALLOWED FOR CHANGES OR MODIFICATIONS MADE UNLESS PRIOR WRITTEN APPROVAL IS OBTAINED FROM THE ARCHITECT, ENGINEER OR OWNER IN THE FORM OF A CHANGE ORDER.
10. DRAWINGS: ELECTRICAL DRAWINGS ARE DIAGRAMMATIC IN NATURE AND ARE NOT TO BE SCALED.
11. DISCREPANCIES: DISCREPANCIES ON THESE PLANS, SPECIFICATIONS, ETC., MUST BE IMMEDIATELY BROUGHT TO THE ATTENTION OF THE ENGINEER.
12. SURVEY AND CONDITIONS: VISIT THE JOB SITE PRIOR TO SUBMITTING BID, AND MAKE A SURVEY OF EXISTING CONDITIONS WHICH MAY AFFECT THE WORK TO BE PERFORMED. NO OTHER ALLOWANCES WILL BE GIVEN FOR THE SITE CONDITION.
13. CO-OPERATION: CO-OPERATE WITH OTHER CONTRACTORS AND SUBCONTRACTORS ON SITE. ARRANGE AND EXECUTE WORK IN SUCH A MANNER AS REQUIRED FOR THE SATISFACTORY AND EFFICIENT CONSTRUCTION OF THIS PROJECT BY ALL TRADES CONCERNED.
14. TEMPORARY POWER: ARRANGE AND PAY FOR THE CARRIER'S TEMPORARY POWER DURING CONSTRUCTION.
15. INSTALLATION SHALL COMPLY SPECIFICALLY WITH ENGINEERING STANDARDS MANUAL. ANY DEVIATIONS SHALL BE BROUGHT TO THE ATTENTION OF THE PROJECT MANAGER PRIOR TO COMMENCEMENT OF WORK.
16. PROCUREMENT VERIFICATION: PROVIDE AN ITEMIZED CERTIFICATION TO THE PROJECT MANAGER THAT EQUIPMENT AND RELATED HARDWARE HAVE BEEN ORDERED WITHIN 24 HOURS OF NOTICE TO PROCEED.
17. THE SUBCONTRACTOR SHALL NOTIFY AND OBTAIN NECESSARY AUTHORIZATION FROM THE CONTRACTOR BEFORE COMMENCING WORK ON THE AC POWER DISTRIBUTION PANELS.

11.2 INSPECTIONS

1. GENERAL: DURING AND UPON COMPLETION OF WORK, ARRANGE AND PAY ALL ASSOCIATED INSPECTIONS OF ALL ELECTRICAL WORK INSTALLED UNDER THIS CONTRACT IN ACCORDANCE WITH THE CONDITIONS OF THE CONTRACT.
2. INSPECTIONS REQUIRED: AS PER THE LAWS AND REGULATIONS OF THE LOCAL AND/OR STATE AGENCIES HAVING JURISDICTION AT THE PROJECT SITE.
3. INSPECTION AGENCY: APPROVED BY THE LOCAL AND/OR STATE AGENCIES HAVING JURISDICTION AT THE PROJECT SITE.
4. CERTIFICATES: SUBMIT ALL REQUIRED INSPECTION CERTIFICATES TO THE CARRIER AND UTILITY.

11.3 HANGERS AND SUPPORTS

1. MATERIALS: ALL HANGERS, SUPPORTS, FASTENERS AND HARDWARE SHALL BE ZINC COATED OR OF EQUIVALENT CORROSION RESISTANCE BY TREATMENT OR INHERENT PROPERTY AND SHALL BE MANUFACTURED PRODUCTS DESIGNED FOR THE APPLICATION. PRODUCTS FOR OUTDOOR USE SHALL BE HOT DIP GALVANIZED.
2. TYPES: HANGERS, STRAPS, RISER SUPPORTS, CLAMPS, U-CHANNEL, THREADED RODS, ETC., AS INDICATED OR REQUIRED.
3. INSTALLATION: RIGIDLY SUPPORT AND SECURE ALL MATERIAL, RACEWAY AND EQUIPMENT TO BUILDING STRUCTURE USING HANGERS, SUPPORTS AND FASTENERS SUITABLE FOR THE USE ON MATERIALS AND LOADS ENCOUNTERED. PROVIDE ALL NECESSARY HARDWARE. PROVIDE CONDUIT SUPPORTS AT MAXIMUM 5 FT. O.C.
4. STRUCTURAL MEMBERS: DO NOT CUT, DRILL OR WELD ANY STRUCTURAL MEMBER EXCEPT AS SPECIFICALLY APPROVED BY THE ENGINEER.
5. MISCELLANEOUS SUPPORTS: PROVIDE ANY ADDITIONAL STRUCTURAL SUPPORT STEEL BRACKETS, ANGLES, FASTENERS AND HARDWARE AS REQUIRED TO ADEQUATELY SUPPORT ALL ELECTRICAL MATERIALS AND EQUIPMENT.
6. ONE-HOLE STRAPS SHALL NOT BE USED FOR CONDUITS LARGER THAN 3/4 INCH.

11.4 ENCLOSURES / WIREWAYS

1. EQUIPMENT CABINETS, TERMINAL BOXES, JUNCTION BOXES AND PULL BOXES SHALL BE GALVANIZED OR EPOXY-COATED SHEET STEEL, SHALL MEET OR EXCEED UL 50, AND BE RATED NEMA 1 (OR BETTER) INDOORS OR NEMA 3R (OR BETTER) OUTDOORS.
2. WIREWAYS SHALL BE EPOXY-COATED (GRAY) AND INCLUDE A HINGED COVER AND RATED NEMA 1 (OR BETTER) INDOORS, OR NEMA 3R (OR BETTER) OUTDOORS.
3. JUNCTION BOXES: JUNCTION BOXES SHALL BE A MINIMUM SIZE OF 4 INCHES SQUARE BY 1-1/4 INCHES DEEP.

11.5 HOLES, SLEEVES AND OPENINGS

1. GENERAL: PROVIDE ALL HOLES, SLEEVES AND OPENINGS REQUIRED FOR THE COMPLETION OF WORK AND RESTORE ALL DAMAGED SURFACES TO MATCH SURROUNDING SURFACES.
2. CONDUIT PENETRATIONS: SIZE CORE-DRILLED HOLES SO THAT AN ANNULAR SPACE OF NOT LESS THAN 1/4 INCH AND NOT MORE THAN 1 INCH IS LEFT AROUND THE CONDUIT, PIPE, ETC. WHEN OPENINGS ARE CUT IN LIEU OF CORE-DRILLED, PROVIDE SLEEVE IN ROUGH OPENING. SIZE SLEEVES TO PROVIDE AN ANNULAR SPACE OF NOT LESS THAN 1/4 INCH AND NOT MORE THAN 1 INCH AROUND THE CONDUIT, PIPE, ETC. PATCH AROUND SLEEVE TO MATCH SURROUNDING SURFACE.
3. PROVIDE APPROPRIATE WEATHERPROOFING MATERIALS FOR PENETRATIONS NEEDING TO BE SEALED FROM POTENTIAL WATER INTRUSION. PROVIDE FIREPROOF MATERIALS FOR PENETRATIONS REQUIRING A FIRE RATED SEAL. REFER TO CUTTING AND PATCHING NOTES UNDER SECTION 1 – GENERAL.
4. IF ANY ROOFTOP WORK IS TO BE PERFORMED, THE CONTRACTOR SHALL USE THE BUILDING OWNER'S APPROVED ROOFING CONTRACTOR TO PREVENT VOIDING ANY EXISTING ROOFING WARRANTIES. ANY DAMAGE TO THE EXISTING ROOFING MEMBRANE SHALL BE REPAIRED IMMEDIATELY TO AVOID MOISTURE INTRUSION INTO THE BUILDING SHELL.
5. GENERAL: PROVIDE ALL CUTTING, DRILLING, FITTING AND PATCHING NECESSARY FOR ACCOMPLISHING THE WORK. THIS INCLUDES REMOVAL AND REPLACEMENT OF DEFECTIVE WORK AND WORK NOT CONFORMING TO THE REQUIREMENTS OF THE CONTRACT DOCUMENTS.
6. REPAIRS: REPAIR ANY AND ALL DAMAGE TO WORK OF OTHER TRADES CAUSED BY CUTTING AND PATCHING OPERATIONS,

CROWN CASTLE

AW Solutions

an intercloud systems company

MindsTogether.

300 CROWN OAK CENTRE DRIVE, LONGWOOD, FL 32750

TEL: 407.260.0231

FL COA#: 26983

DRAWN BY:	BT	CHECKED BY:	EW

REV	DATE	DESCRIPTION
1	10/09/15	REVISED LOCATION/EQUIPMENT
0	02/19/15	ISSUED FOR PERMIT

EMMANUEL POULIN
SC. P.E. #21093

IT IS A VIOLATION OF LAW FOR ANY PERSON UNLESS THEY ARE ACTING UNDER THE DIRECTION OF A LICENSED PROFESSIONAL ENGINEER TO ALTER THIS DOCUMENT. UNLESS EXPLICITLY AGREED TO BY AW SOLUTIONS IN WRITING, AW SOLUTIONS DISCLAIMS ALL LIABILITY ASSOCIATED WITH THE REUSE, ALTERATION OR MODIFICATION OF THE CONTENTS HEREIN.

NODE ID#: **FPSC-001m2-A**

POLYGON ID#: **FIVE POINTS COLUMBIA**

SHEET TITLE:

SPECIFICATIONS

SHEET NUMBER:

SP1

USING SKILLED MECHANICS OF THE TRADES INVOLVED.
7. DO NOT CUT MAJOR STRUCTURAL ELEMENTS WITHOUT APPROVAL. PATCHING SHALL BE OF QUALITY EQUAL TO AND OF MATCHING APPEARANCE OF EXISTING CONSTRUCTION.

11.6 CONDUCTORS
1. USE 98% CONDUCTIVITY COPPER WITH TYPE XHHW-2 INSULATION, 600 VOLT, COLOR CODED. USE SOLID CONDUCTORS FOR WIRE UP TO AND INCLUDING NO. 8 AWG, STRANDED CONDUCTORS FOR WIRE LARGER THAN NO. 8 AWG. USE PRESSURE-TYPE INSULATED TWIST-ON CONNECTORS FOR NO. 10 AWG AND SMALLER, SOLDERLESS MECHANICAL TERMINAL LUGS FOR NO. 8 AWG AND LARGER. ALUMINUM CONDUCTORS SHALL NOT BE USED.
2. NO BX, MC OR ROMEX CABLE SHALL BE PERMITTED.
3. EACH END OF EVERY POWER, GROUNDING AND T1 CONDUCTOR AND CABLE SHALL BE LABELED WITH COLOR-CODED INSULATION OR ELECTRICAL TAPE (3M BRAND, 1/2 INCH PLASTIC ELECTRICAL TAP WITH UV PROTECTION, OR EQUAL). THE IDENTIFICATION METHOD SHALL CONFORM WITH NEC AND OSHA AND MATCH EXISTING INSTALLATION REQUIREMENTS.
4. ALL TIE WRAPS SHALL BE CUT FLUSH WITH APPROVED CUTTING TOOL. REMOVE SHARP EDGES.
5. ALL CONDUIT SIZES SPECIFIED IN THIS DOCUMENT WERE DONE SO TAKING INTO ACCOUNT THE USE OF COPPER CONDUCTORS.

11.7 ELECTRICAL SERVICE
1. GENERAL: COMPLY WITH AND CO-ORDINATE ALL REQUIREMENTS OF THE UTILITY COMPANY.
2. SHORT CIRCUIT RATINGS: PROVIDE EQUIPMENT WITH HIGHER FAULT CURRENT RATINGS AS NEEDED TO MATCH UTILITY COMPANY AVAILABLE FAULT CURRENT.
3. CONTRACTOR TO VERIFY UTILITY CO. FAULT CURRENT AND ENSURE THAT ALL EQUIPMENT MEETS FAULT CURRENT (AT A MINIMUM ALL EQUIPMENT TO BE 10,000 AIC).
4. THE CONTRACTOR IS RESPONSIBLE FOR MAKING ARRANGEMENTS WITH THE ELECTRIC UTILITY RELATIVE TO A TIMELY INSTALLATION OF THE NEW SERVICE AND PAYING ALL ASSOCIATED FEES.
5. IDENTIFICATION: IDENTIFY SERVICE DISCONNECTION MEANS WITH PERMANENT NAMEPLATE.
6. THE LOCATION SHOWN FOR A UTILITY POLE OR CONNECTION TO NEW UTILITIES IS FOR CONCEPTUAL USE ONLY. THE CONTRACTOR SHALL COORDINATE THE ACTUAL LOCATION WITH THE ELECTRIC UTILITY.
7. LOCATION AND ARRANGEMENTS: DRAWINGS INDICATE DIAGRAMMATICALLY THE DESIRED LOCATION OF EQUIPMENT, FIXTURES, OUTLETS, ETC., AND ARE NOT TO BE SCALED. PROPER JUDGMENT MUST BE EXERCISED IN THE EXECUTION TO ENSURE THE BEST POSSIBLE INSTALLATION.
8. PANEL AND DISTRIBUTION BOARD IDENTIFICATION: SWITCHBOARDS, PANELBOARDS, TRANSFORMERS AND DISTRIBUTION SECTIONS SHALL BE IDENTIFIED WITH ENGRAVED, WHITE ON BLACK, LAMINATED, RIGID PHENOLIC NAMEPLATES WITH 1/4 INCH CHARACTERS, SECURELY AFFIXED TO FACE OF CABINET.

11.8 TELEPHONE SERVICE
1. GENERAL: INSTALLATION SHALL BE IN ACCORDANCE WITH TELEPHONE UTILITY COMPANY'S RULES AND REGULATIONS.
2. THE CONTRACTOR IS RESPONSIBLE FOR MAKING ARRANGEMENTS WITH THE TELEPHONE UTILITY RELATIVE TO A TIMELY INSTALLATION OF THE INCOMING TELEPHONE SERVICES AND PAYING ALL ASSOCIATED FEES.
3. METALLIC CONDUIT OR TUBING FOR T1 LINES SHALL BE BONDED TO GROUND ON BOTH ENDS.
4. THE LOCATION SHOWN FOR A TELEPHONE POLE OR CONNECTION TO THE TELCO DEMARC IS FOR CONCEPTUAL USE ONLY. THE CONTRACTOR SHALL COORDINATE THE ACTUAL LOCATION WITH THE TELEPHONE UTILITY.

11.9 CHECKOUT, TESTING AND ADJUSTING
1. CORRECTION/REPLACEMENT: AFTER TESTING BY CONTRACTOR, OWNER OR ENGINEER, CORRECT ANY DEFICIENCIES AND REPLACE MATERIALS AND EQUIPMENT SHOWN TO BE DEFECTIVE OR UNABLE TO PERFORM AT DESIGN OR RATED CAPACITY.
2. POWER CONDUCTORS: CONTRACTOR SHALL CONDUCT A CONTINUITY AND INSULATION TEST ON CONDUCTORS BETWEEN SERVICE DISCONNECT SWITCH AND LOAD CENTER.
3. WHEN SITE POWER IS DERIVED FROM A 3-PHASE SOURCE, LOAD READINGS WILL BE TAKEN AND RECORDED TO MAINTAIN A BALANCED LOAD AT THE PRIMARY SOURCE. RECORDS SHALL BE RETURNED TO THE OWNER'S REPRESENTATIVE.

11.10 RACEWAY SYSTEMS / CONDUIT
1. UNDERGROUND CONDUIT SHALL BE SCHEDULE 40 PVC CONDUIT. UNDERGROUND PVC CONDUIT SHALL TRANSITION TO RIGID GALVANIZED STEEL CONDUIT OR SCHEDULE 80 PVC CONDUIT BEFORE RISING ABOVE GRADE OR CONCRETE SLAB. EXPOSED CONDUIT SHALL BE RIGID GALVANIZED STEEL (RGS) CONDUIT OR SCHEDULE 80 PVC CONDUIT.
2. GRS CONDUITS, WHEN SPECIFIED, SHALL MEET UL-6 FOR GALVANIZED STEEL. ALL FITTINGS SHALL BE SUITABLE FOR USE WITH THREADED RIGID CONDUIT.
3. ELECTRICAL METALLIC TUBING (EMT) OR RIGID, NONMETALLIC CONDUIT (RIGID PVC SCHEDULE 40, OR RIGID PVC SCHEDULE 80 FOR LOCATIONS SUBJECT TO PHYSICAL DAMAGE) SHALL BE USED FOR EXPOSED INDOOR LOCATIONS.
4. ELECTRICAL METALLIC TUBING (EMT) OR RIGID NONMETALLIC CONDUIT (RIGID PVC SCHEDULE 40) SHALL BE USED FOR CONCEALED INDOOR LOCATIONS.
5. LIQUID-TIGHT FLEXIBLE METALLIC CONDUIT (LIQUID-TITE FLEX) SHALL BE USED INDOORS AND OUTDOORS, WHERE VIBRATION OCCURS OR FLEXIBILITY IS NEEDED.
6. PLUG AND CAP EACH END OF SPARE AND EMPTY CONDUITS AND PROVIDE TWO SEPARATE PULL STRINGS - 200 LB. TEST POLYETHYLENE CORD.
7. ALL CONDUIT BENDS SHALL BE MINIMUM OF 24 INCH RADIUS.
8. ALL METALLIC RACEWAYS SHALL BE GROUNDED PER NEC.
9. THE CONTRACTOR SHALL FIELD VERIFY THE BEST AND LEAST DISRUPTIVE ROUTING OF CONDUITS, CABLE TRAYS AND DUCTS. CONDUIT ROUTING IS SHOWN AS A GUIDE ONLY, ACTUAL CONDUIT PLACEMENT IS TO BE DONE IN A PROFESSIONAL MANNER.

11.11 BELOW GRADE
1. THIS SITE INCLUDES NEW CRITICAL UNDERGROUND ELECTRIC, TELEPHONE AND OTHER SERVICES IN THE VICINITY OF OTHER UNDERGROUND SERVICES AND EQUIPMENT SUPPORTS. THE CONTRACTOR SHALL TAKE ALL NECESSARY PRECAUTIONS TO AVOID SERVICE DISRUPTION TO THESE FACILITIES. THE CONTRACTOR SHALL ALSO CONTACT ELECTRIC AND TELEPHONE, AND ALL OTHER APPROPRIATE AGENCIES PRIOR TO EXCAVATION AT THIS SITE.
2. PRIOR TO EXCAVATION, A UTILITY MARK OUT SHALL BE DONE TO LOCATE EXISTING UNDERGROUNG UTILITIES. ALL UNDERGROUND UTILITIES MUST BE LOCATED AND MARKED OUT PRIOR TO ANY EXCAVATION WORK BEING PERFORMED. PHOTOS SHALL BE TAKEN OF ALL UNDERGROUND WORK AND GIVEN TO THE CARRIER DURING THE SITE'S HANDOFF.
3. ALL TRENCHING AND EXCAVATION WITHIN EXISTING COMPOUNDS MUST BE PERFORMED BY HAND IN ACCORDANCE WITH THE OWNER'S SPECIFICATIONS. ANY OTHER METHODS OF DIGGING MUST FIRST BE APPROVED BY THE CONSTRUCTION MANAGER.
4. ALL LOW VOLTAGE CONDUIT (600V OR LESS) SHALL HAVE A MINIMUM BURIAL DEPTH OF 24". ALL HIGH VOLTAGE CONDUIT (600V OR MORE) SHALL HAVE A MINIMUM BURIAL DEPTH OF 36".
5. UNDERGROUND CONDUIT SHALL BE ENCASED IN REINFORCED CONCRETE IN AREAS OF VEHICLE TRAFFIC. CONCRETE ENCASEMENT SHALL BE 3" MINIMUM ALL AROUND AND BETWEEN CONDUITS.
6. ALL BURIED CONDUIT SHALL BE IDENTIFIED WITH ELECTRICAL MARKER TAPE. TAPE SHALL BE PLACED 12" ABOVE CONDUIT FOR EASY IDENTIFICATION.

11.12 EQUIPMENT
1. THE MAIN CIRCUIT BREAKER SHALL BE RATED FOR STANDARD A.I.C. RATING HIGHER THAN INCOMING EQUIPMENT A.I.C.
2. ALL EQUIPMENT SHALL BE BRACED FOR STANDARD A.I.C. RATING HIGHER THAN INCOMING FROM UTILITY CO.
3. THE CONTRACTOR SHALL PROVIDE AN ITEMIZED CERTIFICATION TO THE CARRIER OF ALL EQUIPMENT AND RELATED HARDWARE, SPECIFIED TO BE PURCHASED AND INSTALLED BY THE CONTRACTOR, WHERE ORDERED WITHIN 24 HRS OF THE NOTICE TO PROCEED.
4. ALL ELECTRICAL COMPONENTS SHALL BE CLEARLY LABELED WITH ENGRAVED PLASTIC LABELS. ALL EQUIPMENT SHALL BE LABELED WITH ITS VOLTAGE RATING, PHASE CONFIGURATION, WIRE CONFIGURATION, POWER OR AMPACITY RATING AND BRANCH CIRCUIT ID NUMBERS (I.E., PANELBOARD AND CIRCUIT ID'S).
5. METAL RECEPTACLE, SWITCH AND DEVICE BOXES SHALL BE GALVANIZED, EPOXY-COATED OR NON-CORRODING; SHALL MEET OR EXCEED UL 514A AND NEMA OS 1; AND BE RATED NEMA 1 (OR BETTER) INDOORS OR WEATHER-PROTECTED (WP OR BETTER) OUTDOORS.
6. NONMETALLIC RECEPTACLE SWITCH AND DEVICE BOXES SHALL MEET OR EXCEED NEMA OS 2, AND BE RATED NEMA 1 (OR BETTER) INDOORS OR WEATHER-PROTECTED (WP OR BETTER) OUTDOORS.

11.13 TRANSIENT VOLTAGE SURGE SUPPRESSION (TVSS)
1. TVSS DEVICES FOR AC POWER SHALL BE INSTALLED IN ALL EXISTING FACILITIES THAT ARE MISSING TVSS DEVICES OR HAVE UNSUITABLE TVSS DEVICES.
2. THE AC POWER COMMON MODE SURGE SUPPRESSOR SHALL BE CONNECTED TO THE COMMERCIAL POWER INPUT SIDE OF THE MANUAL TRANSFER SWITCH.
3. IN MARKETS WITH LIGHTNING ZONE > OR = TO 4, RF TVSS DEVICE SHALL BE INSTALLED AT THE ENTRANCE TO THE SHELTER OR AS CLOSE AS POSSIBLE TO THE BTS CABINET FOR OUTDOOR SITES, TO PROTECT AGAINST LIGHTNING AND TRANSIENT VOLTAGES.
4. A T1 TRANSPORT TVSS DEVICE SHALL BE INSTALLED AT ALL SITES BETWEEN THE NIU AND THE BTS.

13 - RF AND TOWER APPURTENANCE INSTALLATION RELATED NOTES

13.1 COAXIAL CABLE REQUIREMENTS:
1. GENERAL: PROVIDE ALL LABOR, EQUIPMENT, AND MATERIALS NECESSARY FOR RECEIVING, INSTALLING, TESTING, AND ADJUSTING ANTENNA CABLES FROM THE ANTENNA TO THE CONNECTIONS AT THE BASE TRANSMISSION SYSTEM (BTS). THIS SHALL INCLUDE ALL EQUIPMENT SHOWN OR REQUIRED FOR A COMPLETE OPERATING SYSTEM. ANTENNA, ANTENNA CABLES, CONNECTORS, AND FITTING SHALL BE THIRD PARTY FURNISHED COMPONENTS AS SHOWN ON THE BILL OF MATERIALS.
2. CABLE HANGERS SHALL BE INSTALLED AT A MAXIMUM 4' SPACING.
3. INSTALLATION
   - A. COAXIAL CABLE LENGTHS SHALL BE FIELD MEASURED. INSTALLER SHALL NOTIFY CARRIER PRIOR TO PURCHASE OF CABLE OF THE OVERALL LENGTH REQUIRED.
   - B. COAXIAL CABLE TYPE AND DIAMETER SHALL BE VERIFIED WITH CARRIER.
   - C. COAXIAL CABLES SHALL BE LABELED IN ACCORDANCE WITH CARRIER ELECTRICAL MATERIALS AND METHODS SPECIFICATIONS. ALL MAIN CABLES WILL BE COLOR CODED AT FOUR LOCATIONS: A) AT ANTENNA PRIOR TO JUMPER, B) AT THE BOTTOM OF THE TOWER, C) EXTERIOR PART OF THE WAVE GUIDE ENTRY PORT (AT THE SHELTER/CABINET WALL), D) INTERIOR OF THE SHELTER/CABINET.
   - D. PROVIDE AT LEAST 6' OF SLACK IN THE MAIN COAXIAL CABLES AT THE ANTENNA END TO PROVIDE FOR FUTURE CONNECTOR REPLACEMENT.
   - E. INSTALL CONNECTORS TO COAXIAL CABLE AT BOTH ENDS (ANTENNA END AND BTS LOCATION).
   - F. UPON SUCCESSFUL COMPLETION OF THE SWEEP TEST, THE CONTRACTOR SHALL PROVIDE A WEATHERTIGHT SEAL ON THE COAX CABLES.
   - G. THE MINIMUM BENDING RADIUS FOR ALL ANTENNA CABLES SHALL BE AS SHOWN BELOW OR PER THE MANUFACTURER, WHICHEVER IS MORE CONSERVATIVE:

CABLE	IN AIR OR CABLE TRAY	IN CONDUIT
1/2"	5"	10"
7/8"	10"	18"
1-5/8"	20"	28"

4. CABLES SHALL BE INSTALLED WITH THE MINIMUM NUMBER OF BENDS. CABLE SHALL NOT BE LEFT UNTERMINATED IN THE FIELD.
5. GROUNDING
   - A. ALL MAIN CABLES WILL BE GROUNDED AT: A) THE ANTENNA, B) MIDDLE OF THE CABLE RUN IF OVER 200', C) PRIOR TO ENTERING EQUIPMENT SHELTER/CABINET (WITHIN 1' OF ENTRY).
   - B. GROUNDING KITS - AFTER INSTALLATION OF GROUND STRAPS, THE CONNECTIONS SHALL BE MADE WEATHER TIGHT USING WEATHERPROOF KITS AS IDENTIFIED. GROUND PIGTAILS SHALL BE BROUGHT OUT IN THE DOWNWARD DIRECTION FROM THE CONNECTION TO THE ANTENNA CABLE WITHOUT ANY SHARP BENDS (MINIMUM RADIUS 10") AND CONNECTION SHALL BE MADE TO GROUNDING SYSTEM.

13.2 ANTENNA REQUIREMENTS:
1. AZIMUTHS ARE ORIENTED CLOCKWISE FROM TRUE NORTH.
2. CONTRACTOR SHALL VERIFY ANTENNA TYPE, AZIMUTHS, AND DOWNTILTS WITH THE CARRIER PRIOR TO CONSTRUCTION.
3. THE MINIMUM DISH RAD CENTER HEIGHT ABOVE THE ROOF SHALL BE 6'-8".

13.3 TOWER CLIMBING SAFETY GUIDELINES
1. TOWER CLIMBERS MUST HAVE COMPLETED A NATE CERTIFIED CLIMBING TRAINING COURSE PER CONTRACT SPECIFICATIONS PRIOR TO WORK ON THIS STRUCTURE.
2. CONTRACTOR MUST COMPLY WHY THE STANDARD "RF POWER AND LOCKOUT/TAGOUT" PROCEDURES BEFORE ALLOWING CLIMBERS ON THIS STRUCTURE.
3. TOWER CLIMBERS WILL NOT BE ALLOWED TO ACCESS TOWER IN ADVERSE WEATHER CONDITIONS, INCLUDING HIGH WINDS, LIGHTNING, RAIN, SNOW ICE OR DURING NIGHT TIME.
4. CONTRACTOR OR CLIMBERS SHALL IMMEDIATELY REPORT ANY CLIMBING EQUIPMENT OR CONDITIONS JUDGED INADEQUATE OR UNSAFE.
5. EMERGENCY NUMBERS SHALL BE POSTED ON SITE AND ADVERTIZED TO CLIMBERS BEFORE THE BEGINNING OF THE WORK.
6. SAFETY MEETINGS SHALL TAKE PLACE EVERY MORNING BEFORE THE WORK DAY BEGINS.

20 - SITE SPECIFIC NOTES

20.1 GENERAL
1. CONSTRUCTION INCLUDES:
   - INSTALLATION OF COMMUNICATION EQUIPMENT
   - ANTENNAS AND MOUNT INSTALLATION ON STRUCTURE
2. THE PROFESSIONALS INVOLVED ON THIS PROJECT ARE AS FOLLOWS:
   - ENGINEER: AW SOLUTIONS
   - 300 CROWN OAK CENTRE DRIVE
     LONGWOOD, FL 32750
     PHONE 407.260.0231

LEGEND AND ABBREVIATIONS

AHJ	AUTHORITY HAVING JURISDICTION
AWG	AMERICAN WIRE GAUGE
BCW	BARE COPPER WIRE
BTS	BASE TRANSMISSION SYSTEM
CGBE	COAX ISOLATED GROUND BAR, EXTERNAL
DIA,ø	DIAMETER
EMT	ELECTRICAL METALLIC TUBING
GEN	GENERATOR
GPS	GLOBAL POSITIONING SYSTEM
MIGB	MASTER ISOLATED GROUND BAR
NEC	NATIONAL ELECTRIC CODE, LATEST ADOPTED EDITION
PPC	POWER PROTECTION CABINET
PVC	POLY VINYL CHLORIDE
RGS	RIGID GALVANIZED STEEL
TYP	TYPICAL

CROWN CASTLE

AW Solutions
an intercloud systems company
MindsTogether.
300 CROWN OAK CENTRE DRIVE, LONGWOOD, FL 32750
TEL: 407.260.0231
FL COA#: 26983

DRAWN BY:	BT	CHECKED BY:	EW

REV	DATE	DESCRIPTION
1	10/09/15	REVISED LOCATION/EQUIPMENT
0	02/19/15	ISSUED FOR PERMIT

EMMANUEL POULIN
SC. P.E. #21093

IT IS A VIOLATION OF LAW FOR ANY PERSON UNLESS THEY ARE ACTING UNDER THE DIRECTION OF A LICENSED PROFESSIONAL ENGINEER TO ALTER THIS DOCUMENT. UNLESS EXPLICITLY AGREED TO BY AW SOLUTIONS IN WRITING, AW SOLUTIONS DISCLAIMS ALL LIABILITY ASSOCIATED WITH THE REUSE, ALTERATION OR MODIFICATION OF THE CONTENTS HEREIN.

NODE ID#: **FPSC-001m2-A**

POLYGON ID#: **FIVE POINTS COLUMBIA**

SHEET TITLE:

SPECIFICATIONS

SHEET NUMBER:

SP2